Always precise

Winkhaus autoLock AV2+ with blueMatic AV2-E

AUTOMATIC Multi-Point Locking System

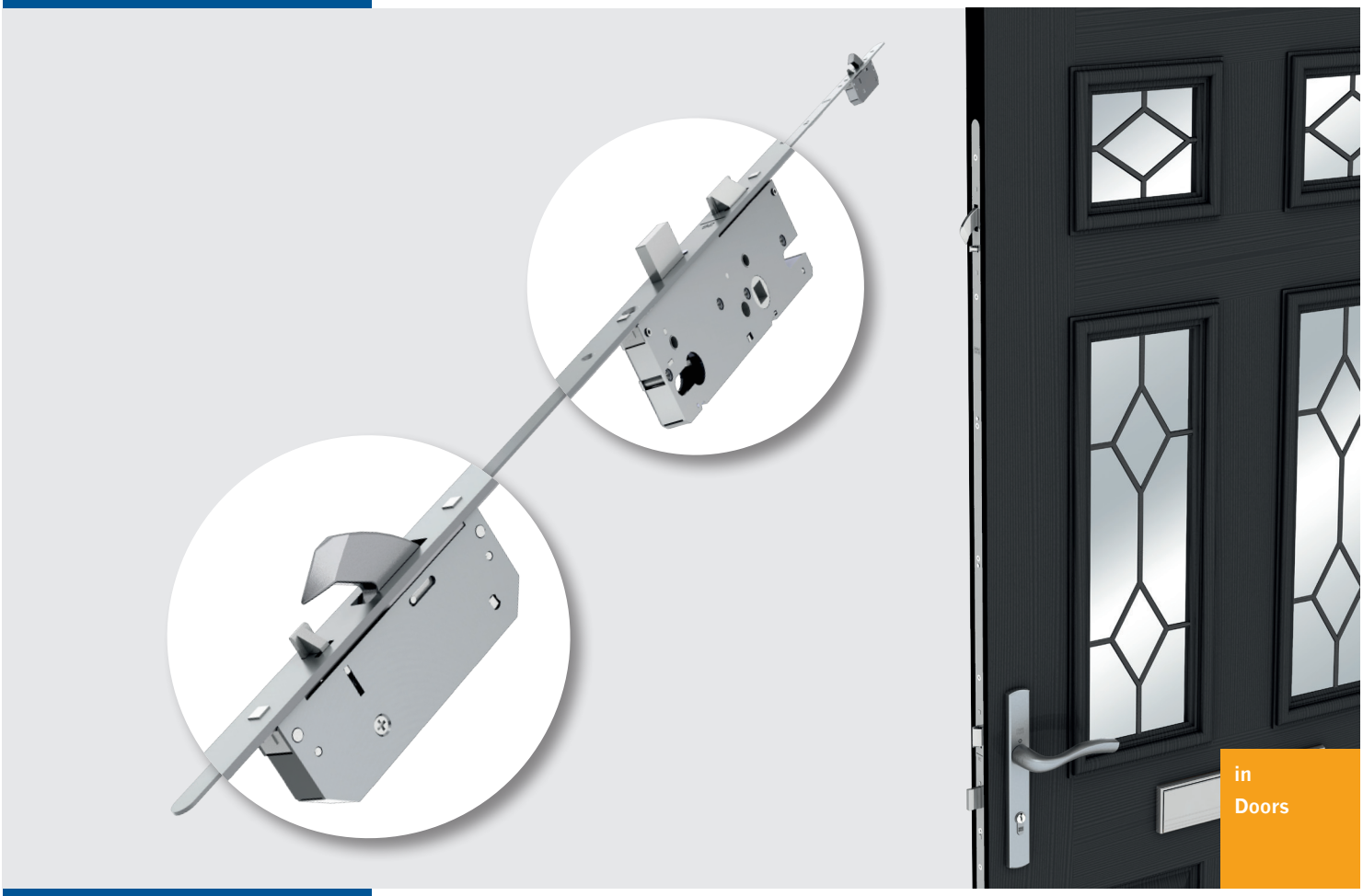

made in GERMANY

Secured by Design
SBD
Official Police Security Initiative

Winkhaus autoLock AV2+

AUTOMATIC Multi-Point Locking System - Locks automatically as soon as the door is closed!!

With over 150 years experience in producing locking systems for the world market Winkhaus is a market leader producing innovative security solutions to meet the challenges of tomorrows rapidly changing security and ease of use requirements.

Superbly engineered and manufactured in Germany the AV2+ Locking system is approved by the Police 'Secured by Design' security initiative. This important independent endorsement is an essential requirement of the Association of British insurers.

No longer is it necessary to lift the handle lever to engage the hook locking mechanism. This has often been difficult for the elderly and the infirm and puts their security at risk. There is a clear indication from the Police that it is not uncommon for doors to be closed just on the latch because of difficulties lifting handles - a fact well known to potential burglars!

Using an Automatic AV2+ Mechanical lock, which operates as a slam lock as soon as the door is closed, also reduces the risk of a 'follow-on' attack or 'tailgating' as it is sometimes known. Closing the door behind you as soon as you enter a dwelling gives immediate full security and reduces the risk of anyone trying to enter immediately behind you.

Key Features:

- An Automatic locking Multi-Point Lock (2 Hooks, Latch and Deadbolt).
- When closing the door, 2 solid anti-pushback hooks automatically operate to achieve instant security.
- Added option of throwing independent central deadbolt with a key or thumbturn.
- The lock can deadlocked even if the hooks are not fully thrown or are blocked.
- Entrance via key from outside (or lever if a back door application).
- Integral handle 'crash' to exit function in an emergency (provided not deadlocked with a key).
- Versatile integral function which allows for easy conversion to an Electronic door lock with Multi-Access Control compatibility.
- Police Secured By Design and OwlMark™ Accreditations.
- Eliminates the need to lift the handle to engage the lock.
- Removes the need to understand the locking operation.
- Prevents doors only ever being "locked on the latch". With the AV2^{+} - shut the door its locked and secure!
- Future proofing - A Social Housing property may house many tenants over the years with varying capabilities.
- Retrofitting - Across the board compatibility with Winkhaus "Family of Locks" due to identical routing details.
- Ability to interchange from Winkhaus lift lever to AV2^{+} if required.
- The ability to upgrade to blueMatic AV2-E by adding a motor allows for the option to link to an intercom system, remote control device etc.
- Designed for use with Timber, Aluminium and Composite doors but can also be used on some PVCu systems.
- Patented design.

Standard 24mm wide keeps with dust boxes, auto latch strike plate and off-set screw fixing for enhanced security.

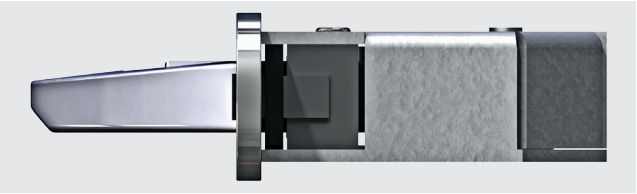

Special design tensile steel chamfered hook allows a high degree of fitting tolerance for door installation.

Keeps fully adjustable ±2mm utilising Torx T15 adjusting tool.

Winkhaus autoLock AV2+

AUTOMATIC Multi-Point Locking System - Locks automatically as soon as the door is closed!!

Fire Doors:

The AV2+ is ideally suited for FD30 Fire Doors for multi-occupancy dwellings. The FD30 test requires doors to be tested in the latch position only, without the locking points being engaged. This is to simulate how a door may be commonly closed. This can, however, create problems with achieving a satisfactory fire test result as the door leaf can bow and twist in the heat. This problem is eliminated with AV2+ as the lock engages automatically in three positions helping to hold the door leaf in place against the intumescent seals and thereby achieving a 30 minute fire door rating.

Latest enhancements:-

- AV2+ in combination with Winkhaus Ecoframe™ successfully tested in doors for Fire Door FD30 applications.
- Centre gearbox strength increased by up to 30% to further reduce the risk of malicious abusive loads.
- Keeps have a return lip and a raised striking platform to provide for larger air gap tolerances.
- Hooks with increased chamfer to allow for greater fitting tolerances.
- Lock faceplates stamped with Police 'Secured By Design' VdS² and SKG* security logos.

The AV2+ range is available with several faceplate and backset options:

Faceplate:

- 16mm square end
- 20mm square end
- 20mm round end

Backset:

- 35mm
- 45mm
- 55mm

Available with or without a deadbolt to suit both residential and communal entrance doors.

Ecoframe™ fitted with typical intumescent seal and Q-Lon gasket. AV2+ Hook keep detail

Can be used with digital locking systems. www.codelocks.co.uk

Compatible with electronic door handles often used for apartment doors. www.saltosystems.com

Technical Features:-

1. 25mm throw tensile steel hooks

High security nickel plated steel hooks fully penetrate the keep rail and help prevent forcing apart of the sash and frame.

2. Hook clearance adjustment in the keeps

With ± 2mm adjustment it is possible to adjust for misalignment of the door during and after installation.

3. Heavy duty steel keeps

Depending on door frame material, 20mm - 24mm wide heavy duty steel keeps are manufactured using high grade steel, plated to comply with the highest Grade 4 corrosion resistance requirement of BS EN1670 European Standard.

4. Latch and deadbolt[1]

Engineered alloy sprung latch with a nickel plated steel deadbolt provides the AV2+ with maximum strength in the centre of the door.

5. High performance gearbox

Tested to 100,000 cycles the sprung gearbox offers the lowest possible operating forces and helps prevent handle 'droop'.

6. Cylinders and handles

AV2+ Multi-point Locks have been designed to harmonise with the Winkhaus range of security europrofile cylinders, Armorshield™ cylinder guard and Winkhaus XR6-51 Kitemark profile cylinder (KM531333). Meets PAS23/24 Security and durability standards, both for single domestic dwellings and multi-occupancy dwellings. The 92PZ locking system is compatible with industry standard handles and also with the Winkhaus Palladio™ and DDA handle which has OwlMark™ approval for use by the elderly and infirm.

7. Lifetime adaptability

AV2+ is part of the 'Winkhaus family of locks' with exactly the same routing details as the Winkhaus Cobra™ and Trulock+ range of locking mechanisms.

No need to lift the door handle to engage the locking mechanism

[1]An AV2+ WITHOUT deadbolt should always be used for communal entrance doors

[2]International certification institution for the Insurance Industry

Winkhaus blueMatic AV2-E

AUTOMATIC Multi-Point Locking System - Locks automatically but hooks can be retracted remotely via access control

blueMatic AV2-E Electronic Locking system

The AV2 Autolock has the optional capability of becoming an electronic access controlled locking system. The lock is designed to accept a “screw on” 12v electronic motor which can then be controlled by means of industry standard multi-option access control systems. When activated the two solid high tensile steel hooks and central latch are withdrawn thus forming the blueMatic AV2-E. The extreme versatility of the blueMatic AV2-E Electronic Locking system is achieved through its easy integration with all access control systems which subsequently leads to its suitability for many different applications.

Where can it be used?

Communal Doors - An ideal product for the communal door of any multi-occupancy dwelling. The householder has the ability to open the communal door through use of an audio/visual intercom system, whilst the door maintains its mechanical crash to exit function and security at all times.*

“Automatic locking prevents casual entry in communal areas” - Bolton at home

Sheltered Housing - The benefit of the solid high tensile steel hooks auto engaging when the door is closed allows for continuous security for the elderly even when an audio/visual intercom system is required to open the door. This maintains a “Secured by Design” level of security at all times unlike the traditional electronic latch release.

This can only offer the use of the latch as an extremely low level of security thus leaving the elderly in a potentially vulnerable position.

“Ideal for sheltered housing and old people’s bungalows” - A. Chadwick, West Lancs District Council

Special Needs & Disability Housing - The multi-access control integration benefits of the blueMatic AV2-E allows for its use with sophisticated products such as remote control openers, biometric readers, electronic door closers and many other disability related beneficial products, whilst never compromising its high level of security.

“Great for people with arthritis” - M Robinson, Progress Housing Group

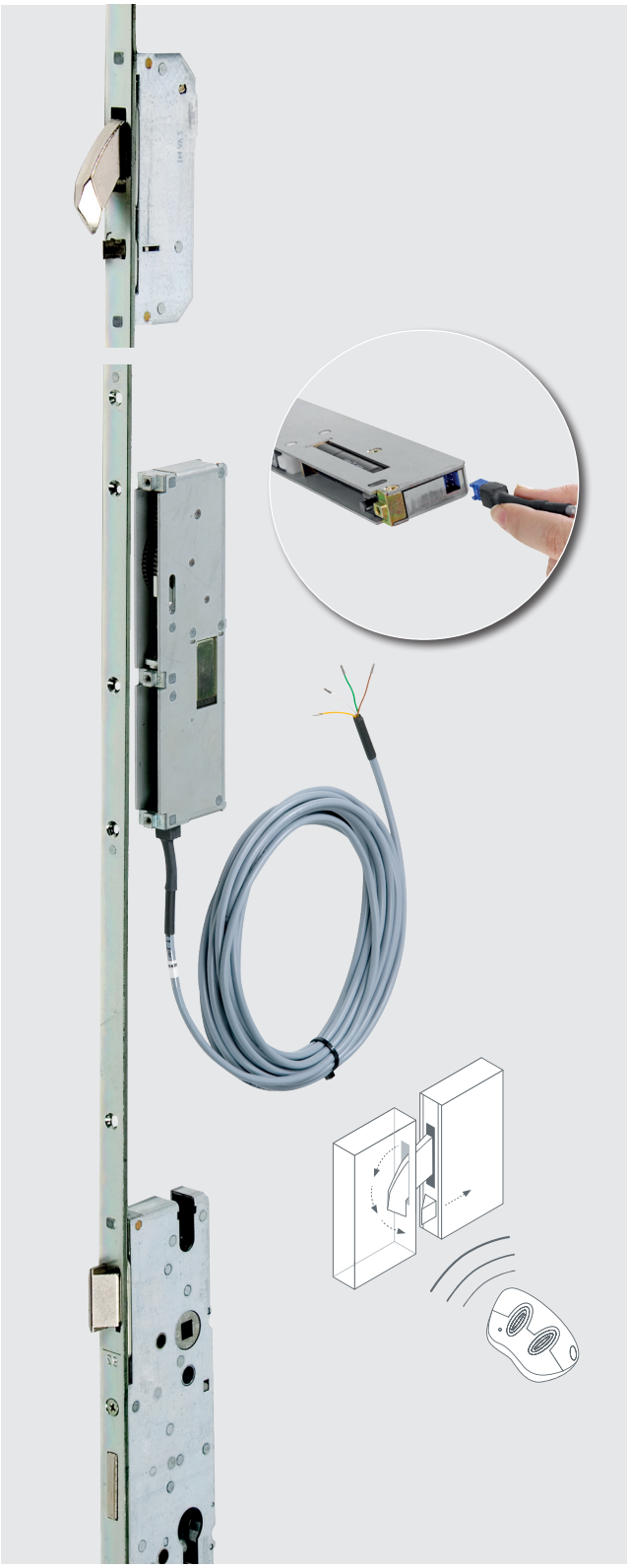

Easy upgrade to electronic operation via screw-on 12V Motor. Fully compatible with existing intercom, ’electronic’ door closers and other access control systems.

blueMatic AV2-E layout and recommended cable run

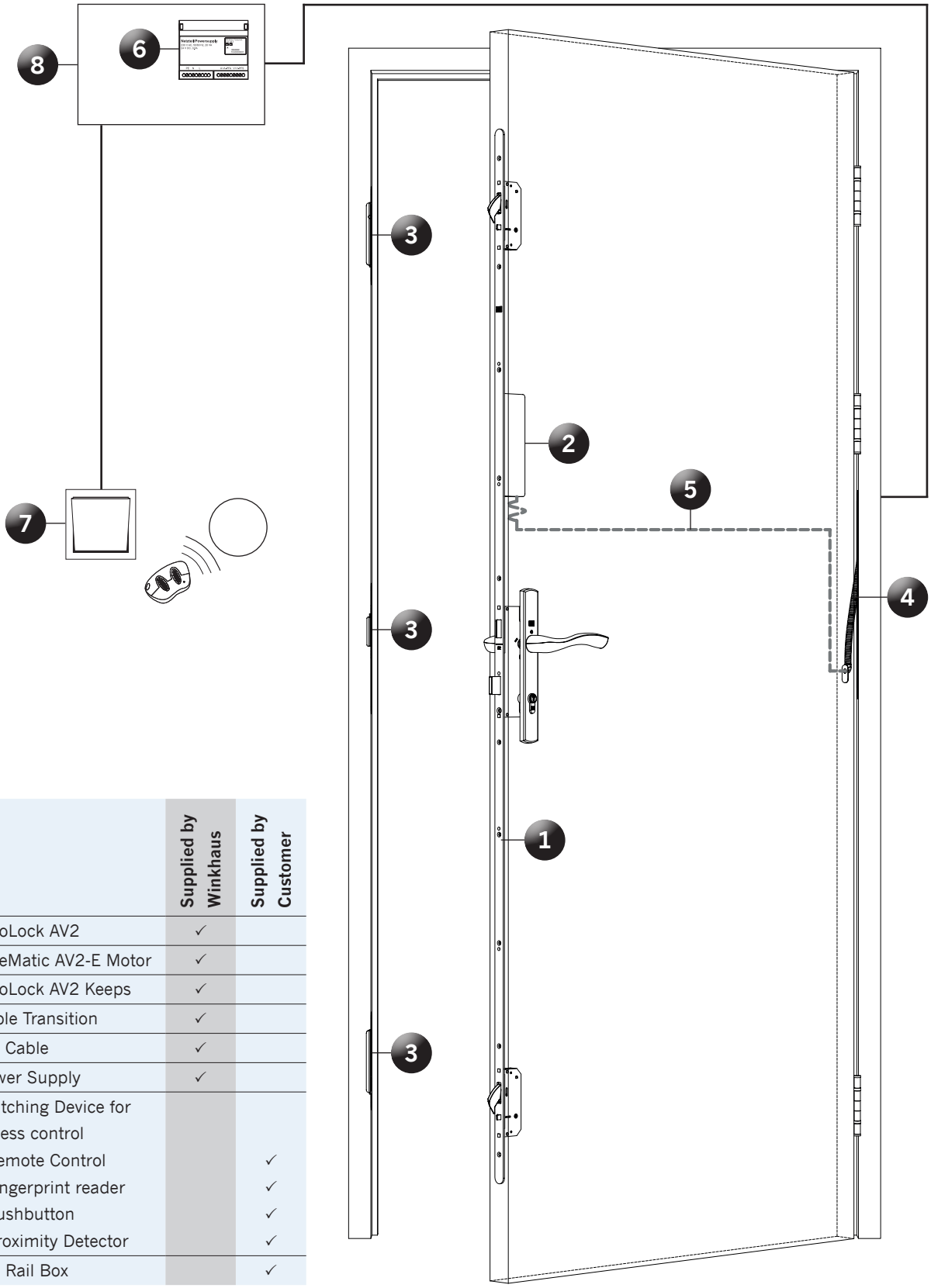

Ref.	Description	Supplied by Winkhaus	Supplied by Customer
1	autoLock AV2	✓	
2	blueMatic AV2-E Motor	✓	
3	autoLock AV2 Keeps	✓	
4	Cable Transition	✓	
5	6m Cable	✓	
6	Power Supply	✓	
7	Switching Device for access control		
	- Remote Control		✓
	- Fingerprint reader		✓
	- Pushbutton		✓
	- Proximity Detector		✓
8	Din Rail Box		✓

Winkhaus UK Ltd

2950 Kettering Parkway, Kettering,
Northants NN15 6XZ
Tel: +44 (0)1536 316000
Fax: +44 (0)1536 416516

www.winkhaus.co.uk
email: enquiries@winkhaus.co.uk