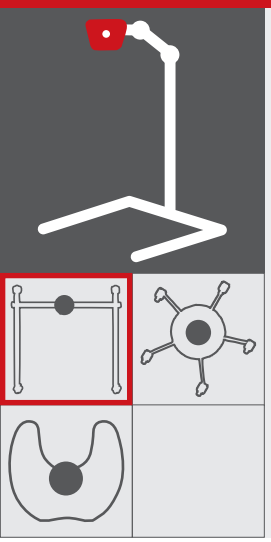

2021-11-30

00.5052~F

Floorstand

- 17.1061 **FS VarioLock**

Sicherheitshinweise
Safety Instructions

Montage
Assembly Instructions

Handhabung
Handling

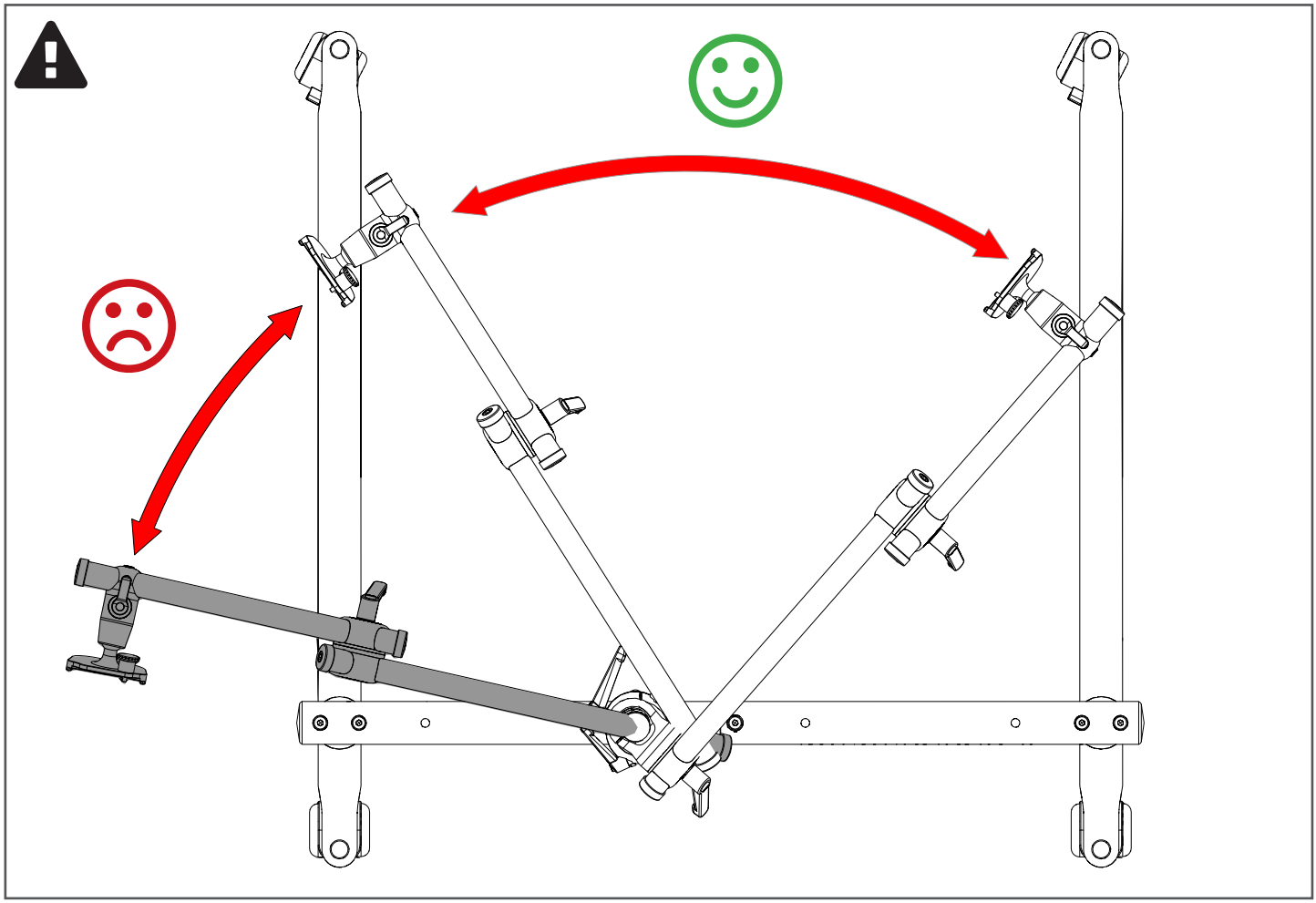

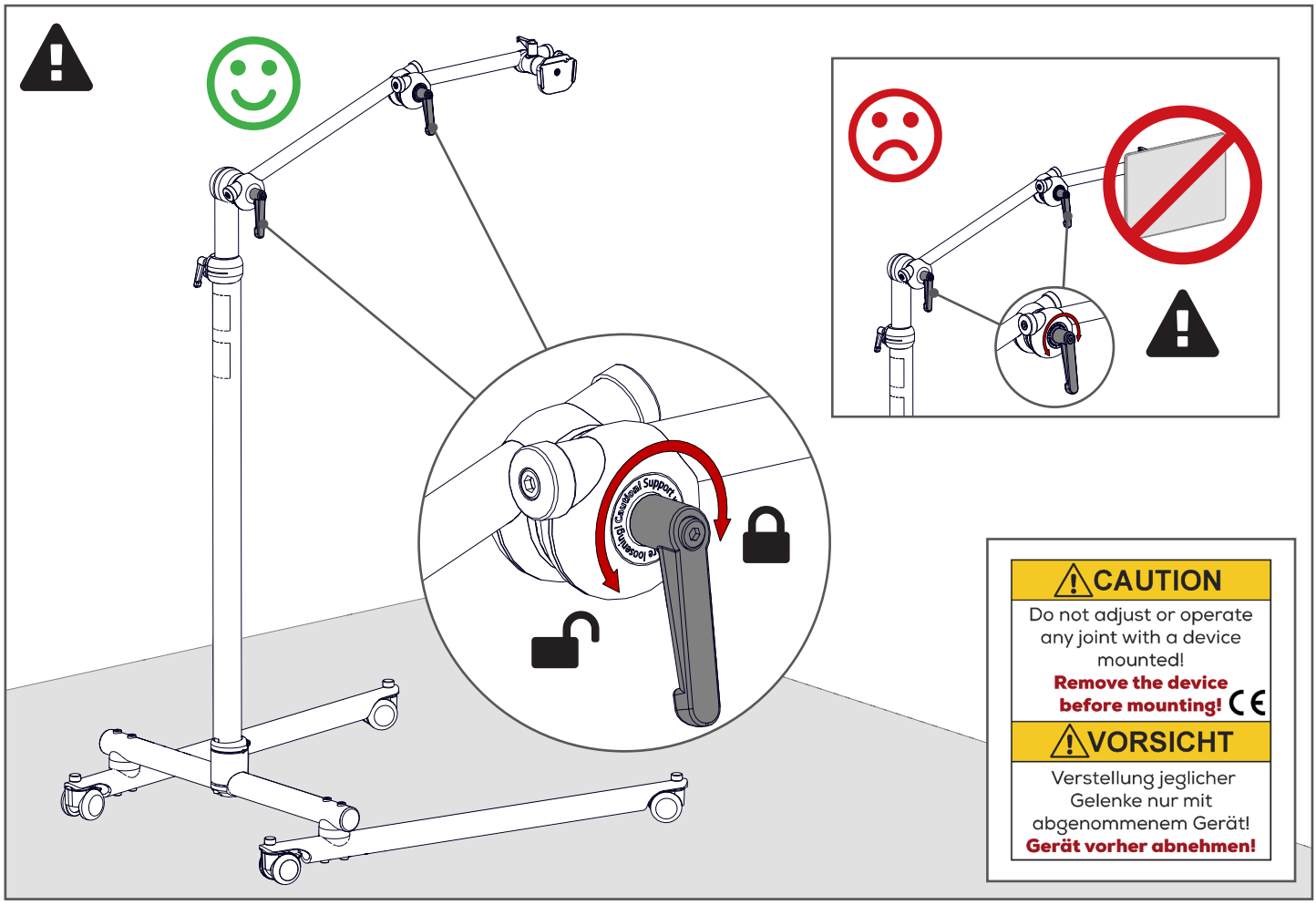
CAUTION
Do not adjust or operate any joint with a device mounted!
Remove the device before mounting!
VORSICHT
Verstellung jeglicher Gelenke nur mit abgenommenem Gerät!
Gerät vorher abnehmen!

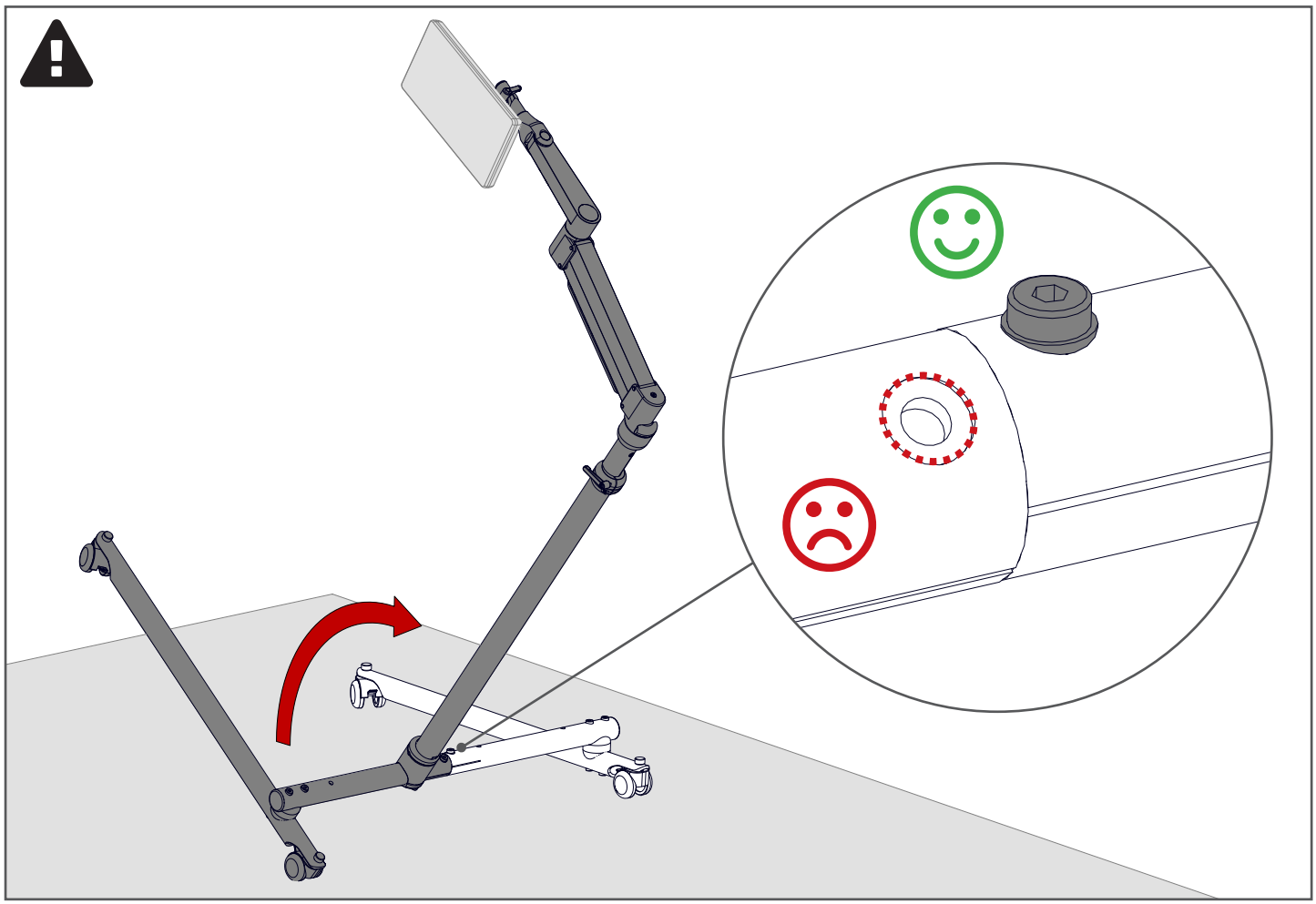

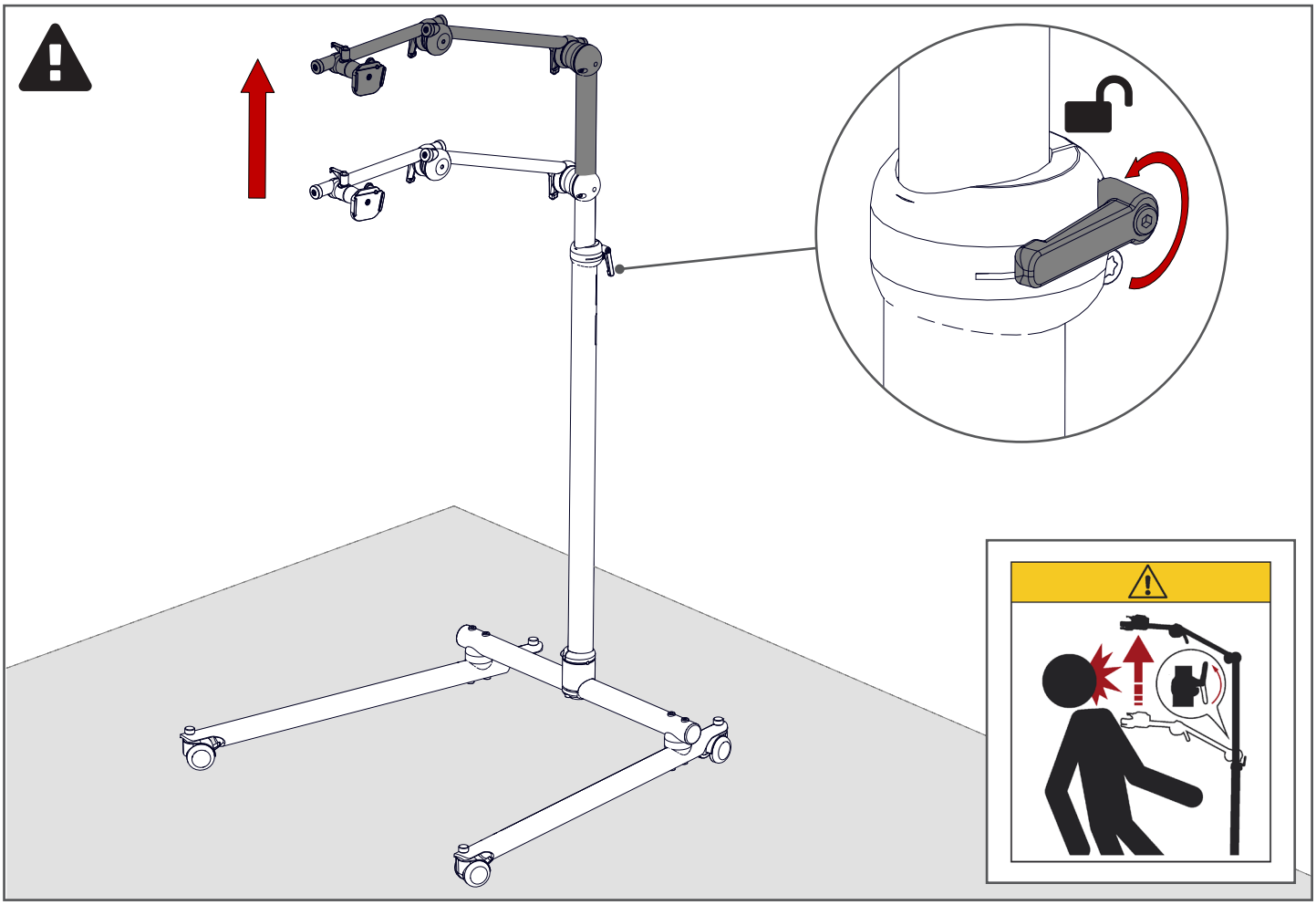

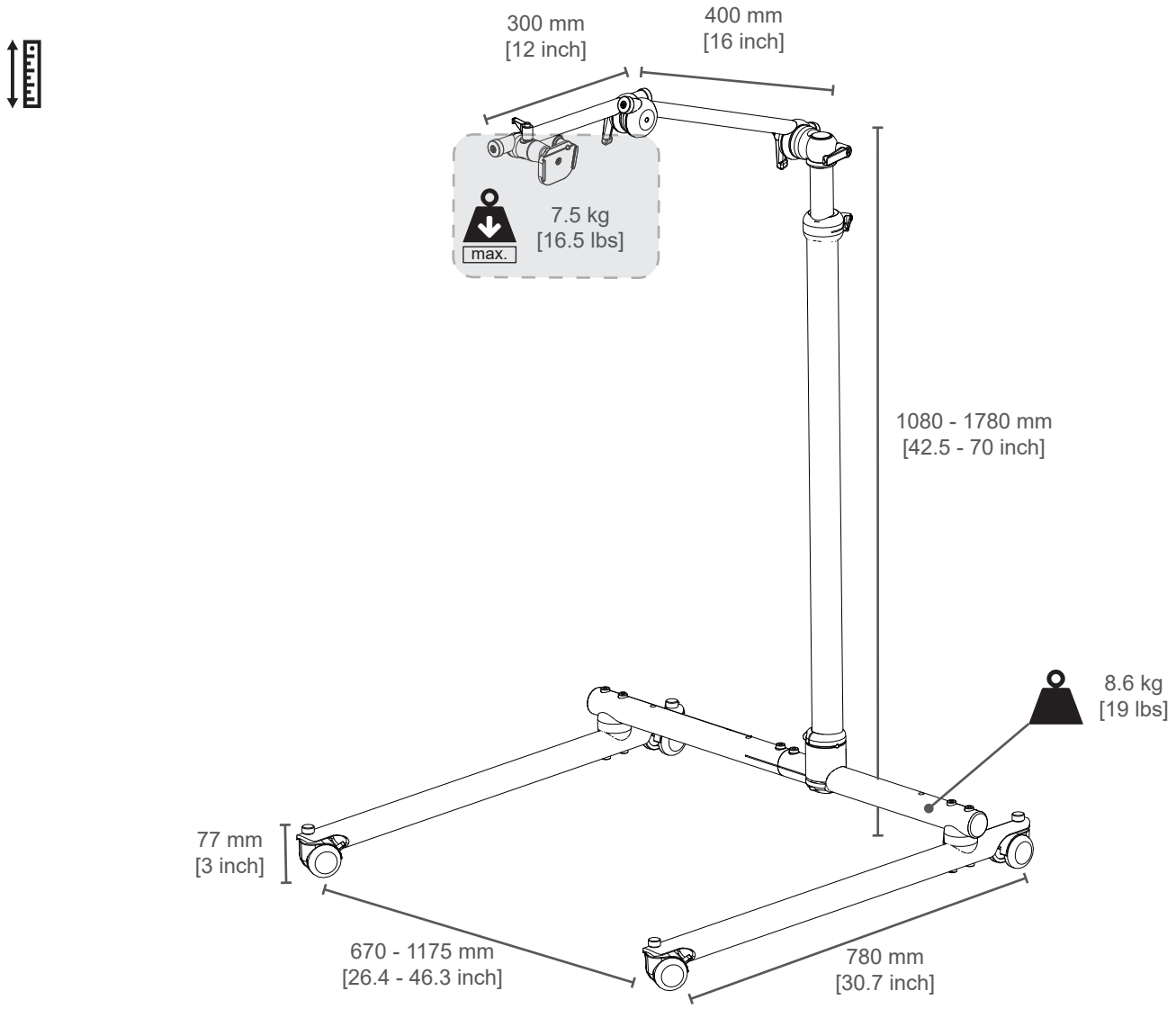
300 mm
[12 inch]
400 mm
[16 inch]
max.
7.5 kg
[16.5 lbs]
1080 - 1780 mm
[42.5 - 70 inch]
8.6 kg
[19 lbs]
77 mm
[3 inch]
670 - 1175 mm
[26.4 - 46.3 inch]
780 mm
[30.7 inch]

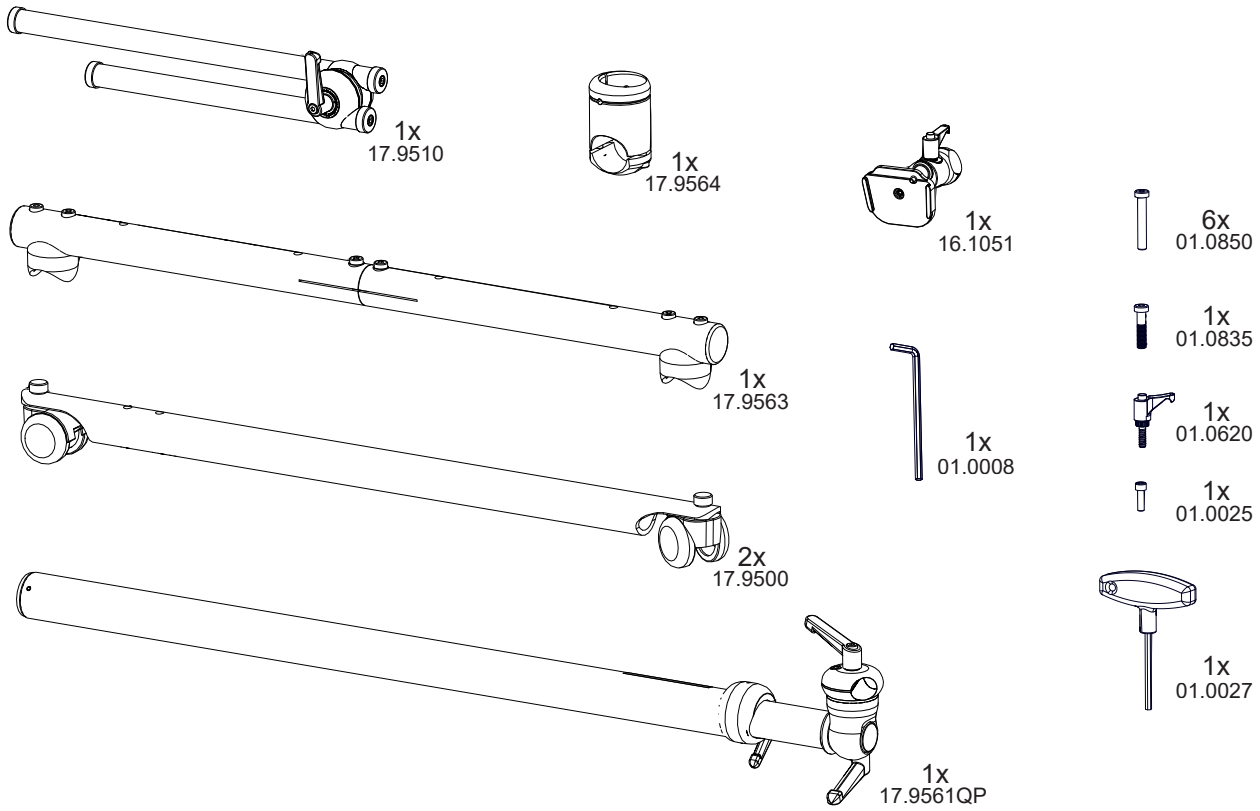
1x
17.9510
1x
17.9564
1x
16.1051
6x
01.0850
1x
17.9563
1x
01.0835
1x
01.0620
1x
01.0008
1x
01.0025
2x
17.9500
1x
01.0027
1x
17.9561QP

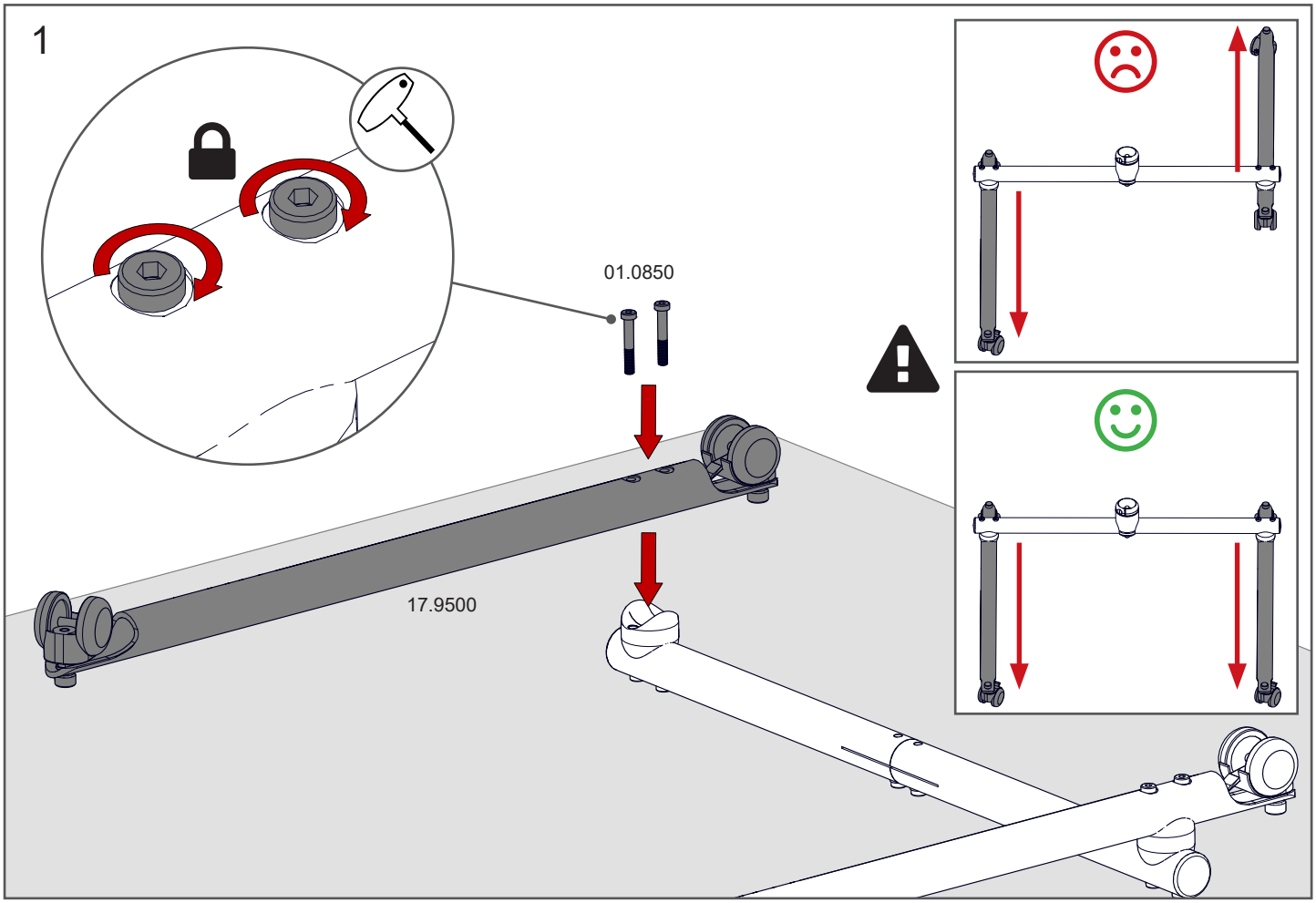
1
01.0850
17.9500

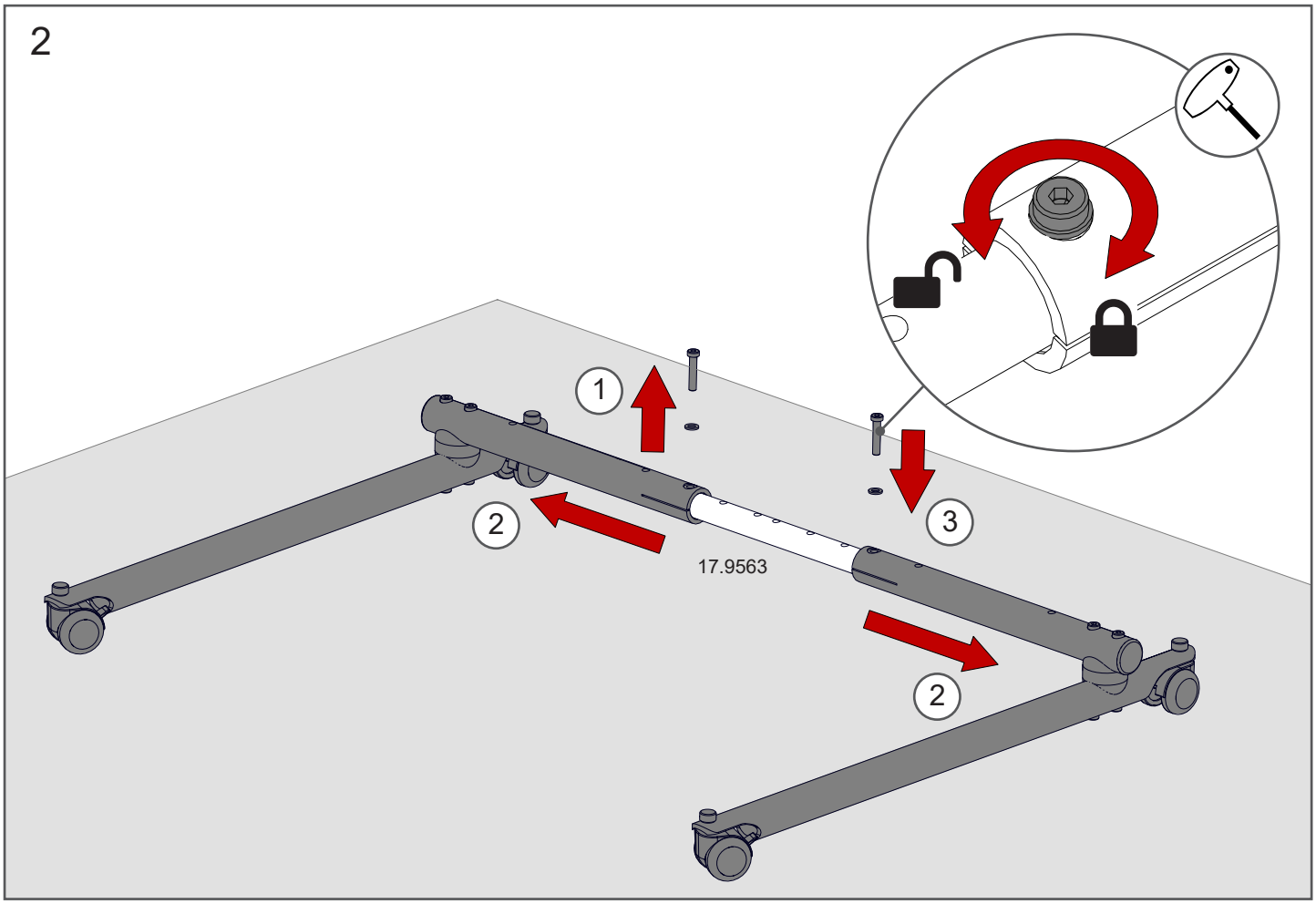
2
1
2
3
17.9563
2

3

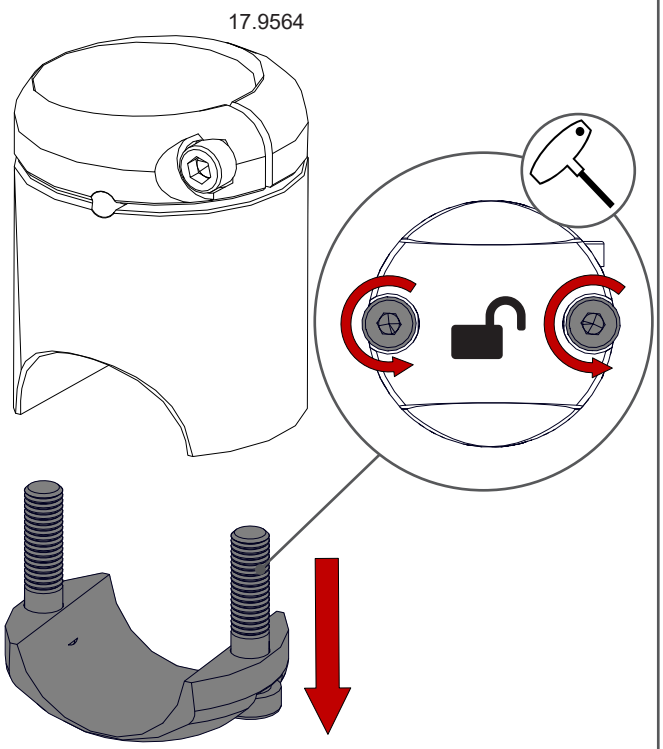

4

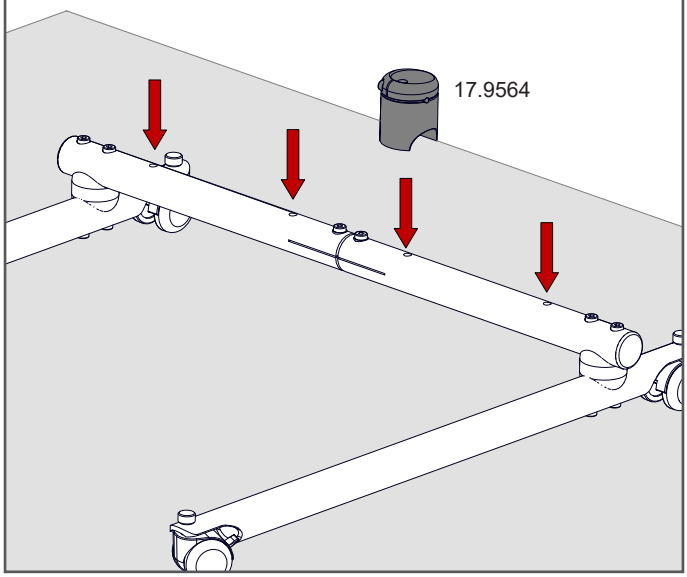

5

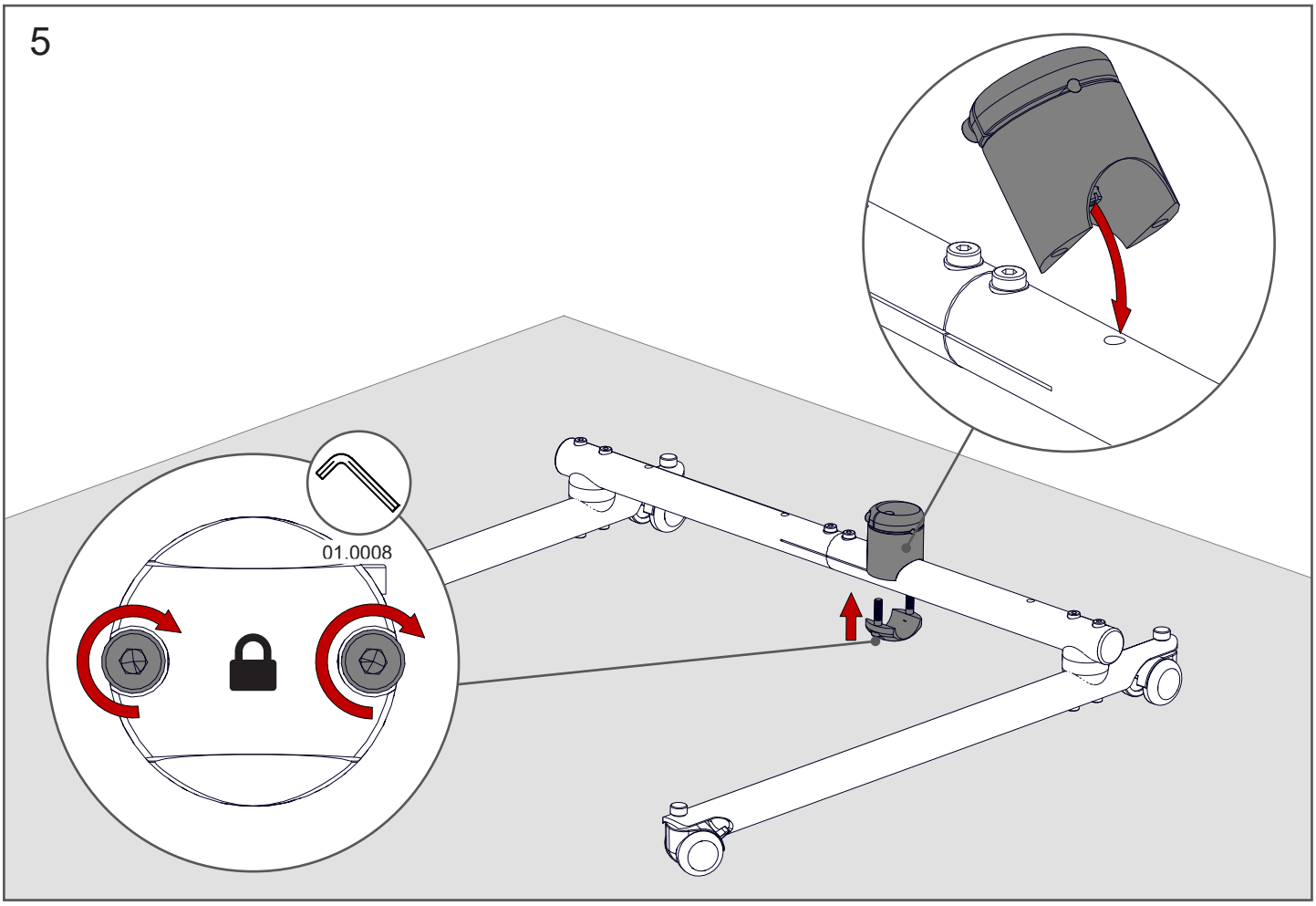

6

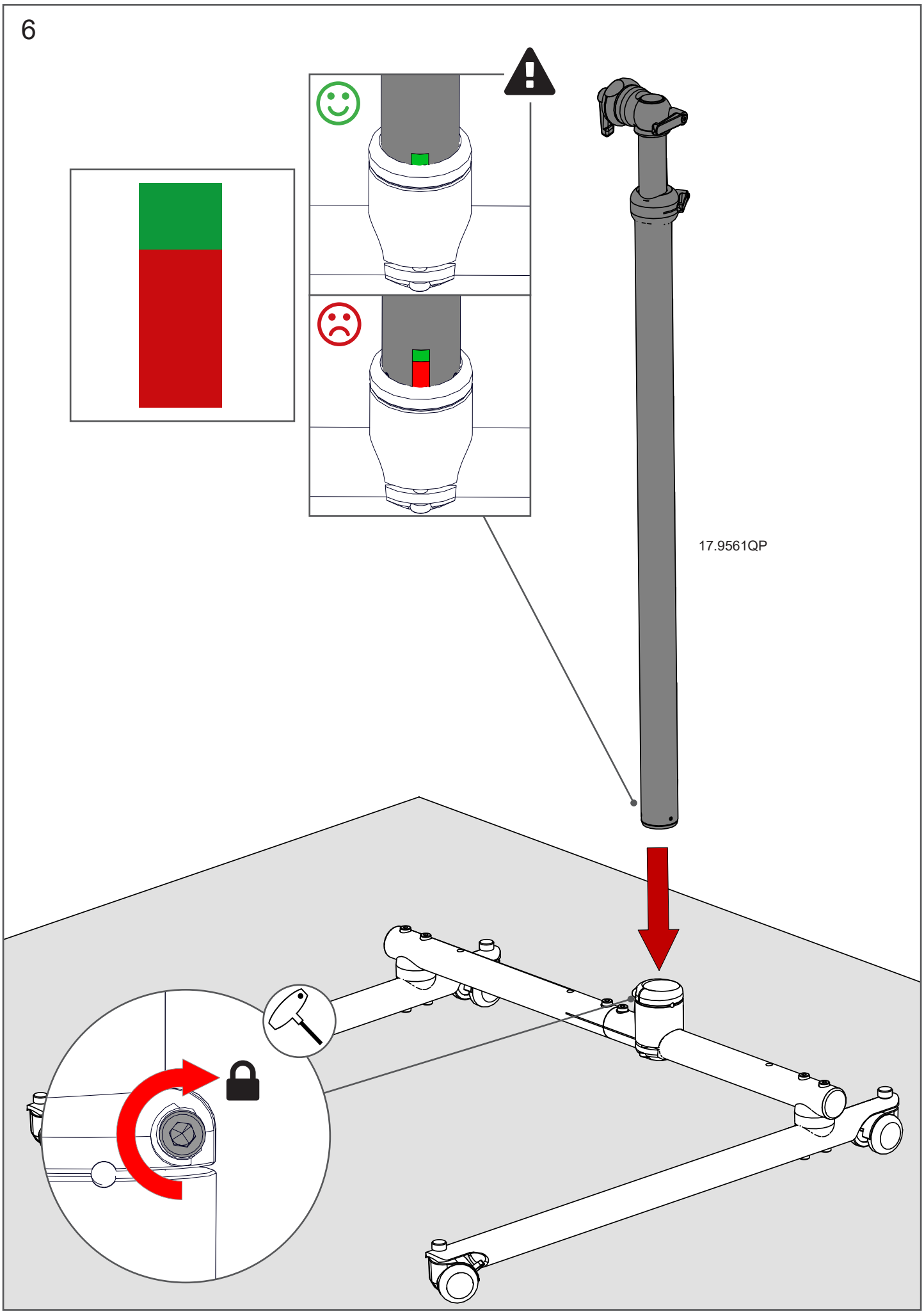

7

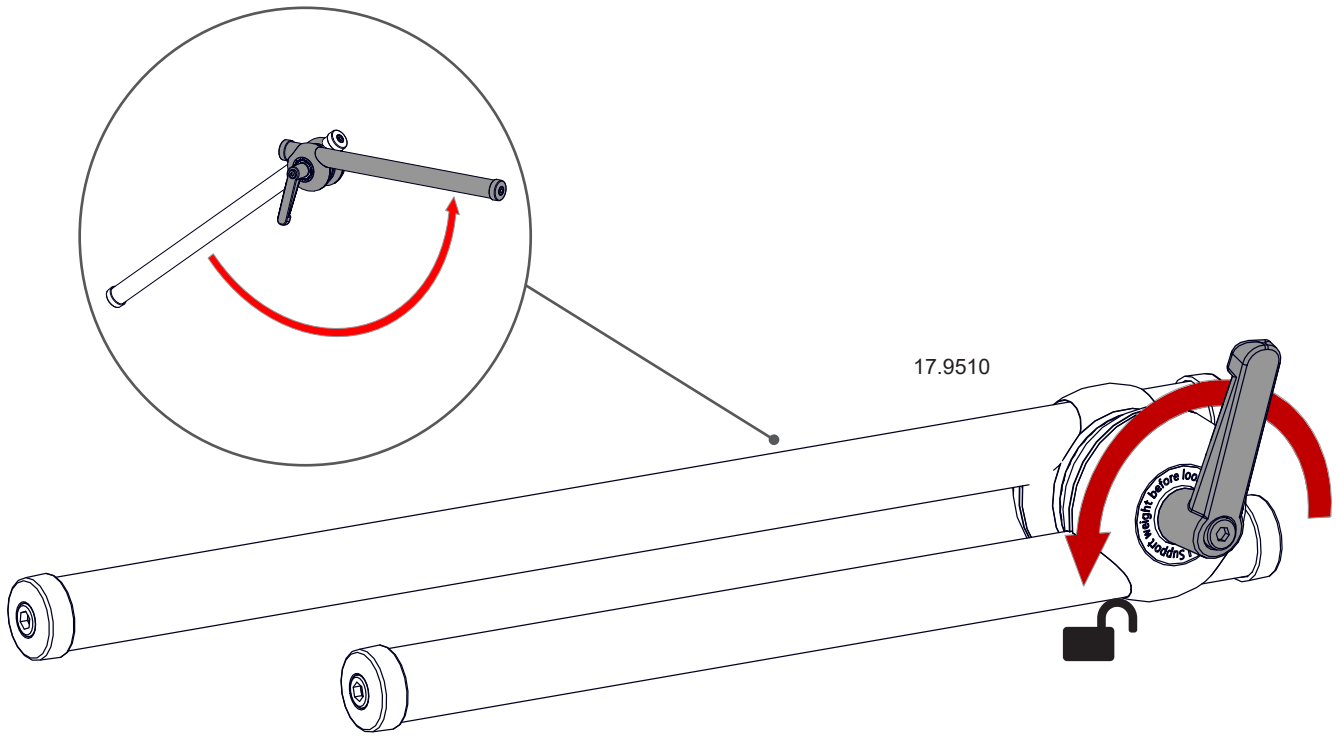

8

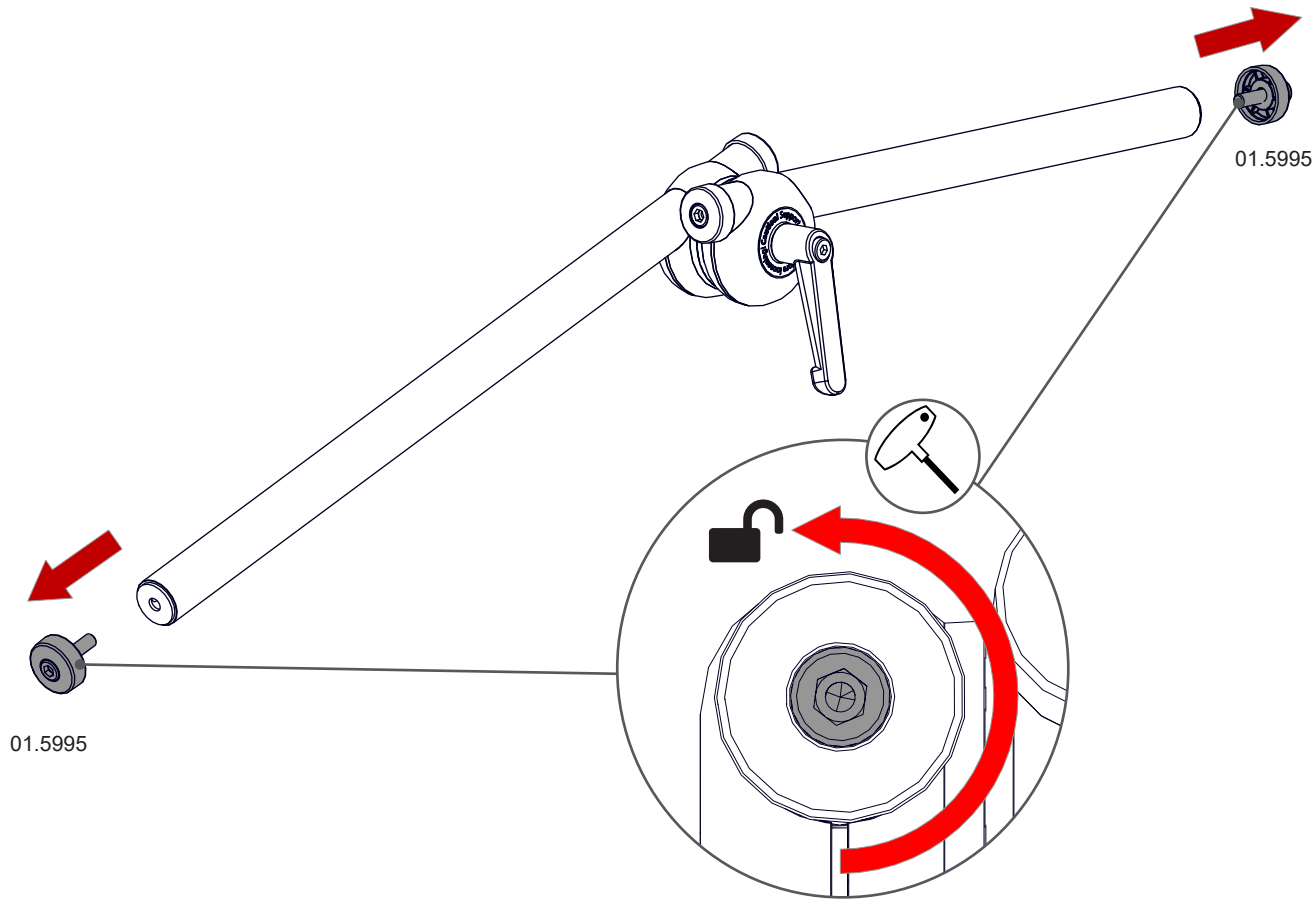

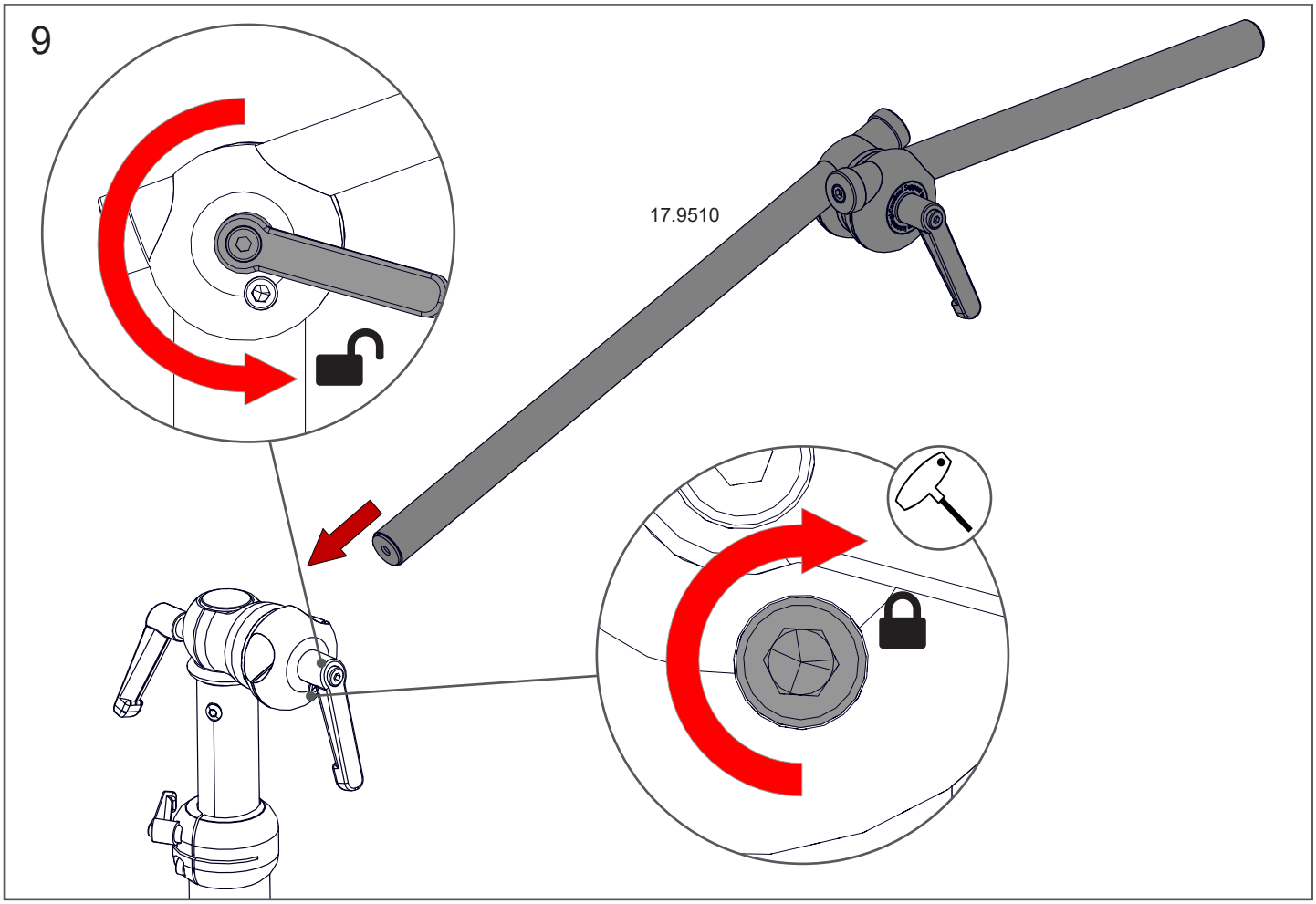
9
17.9510

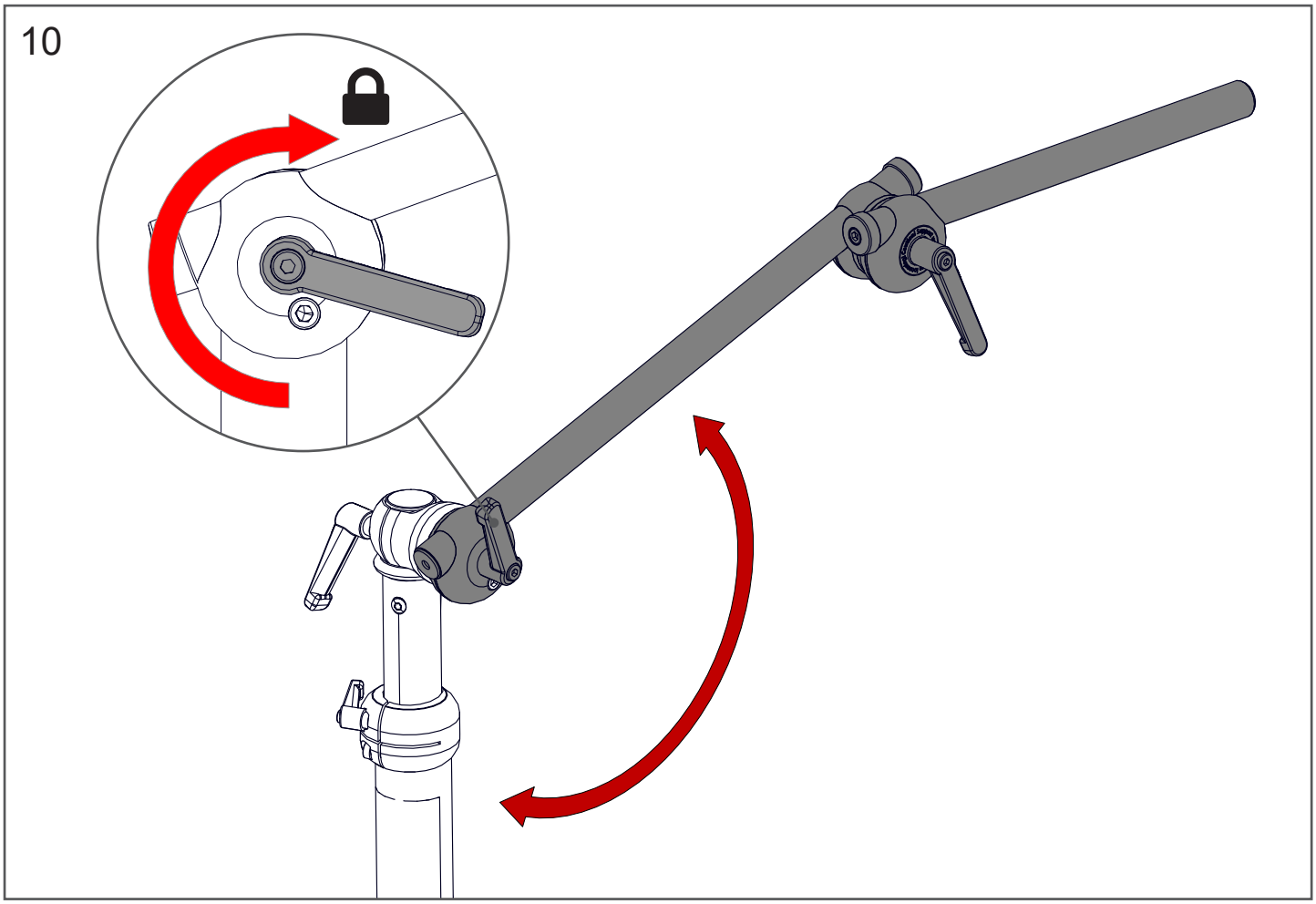
10

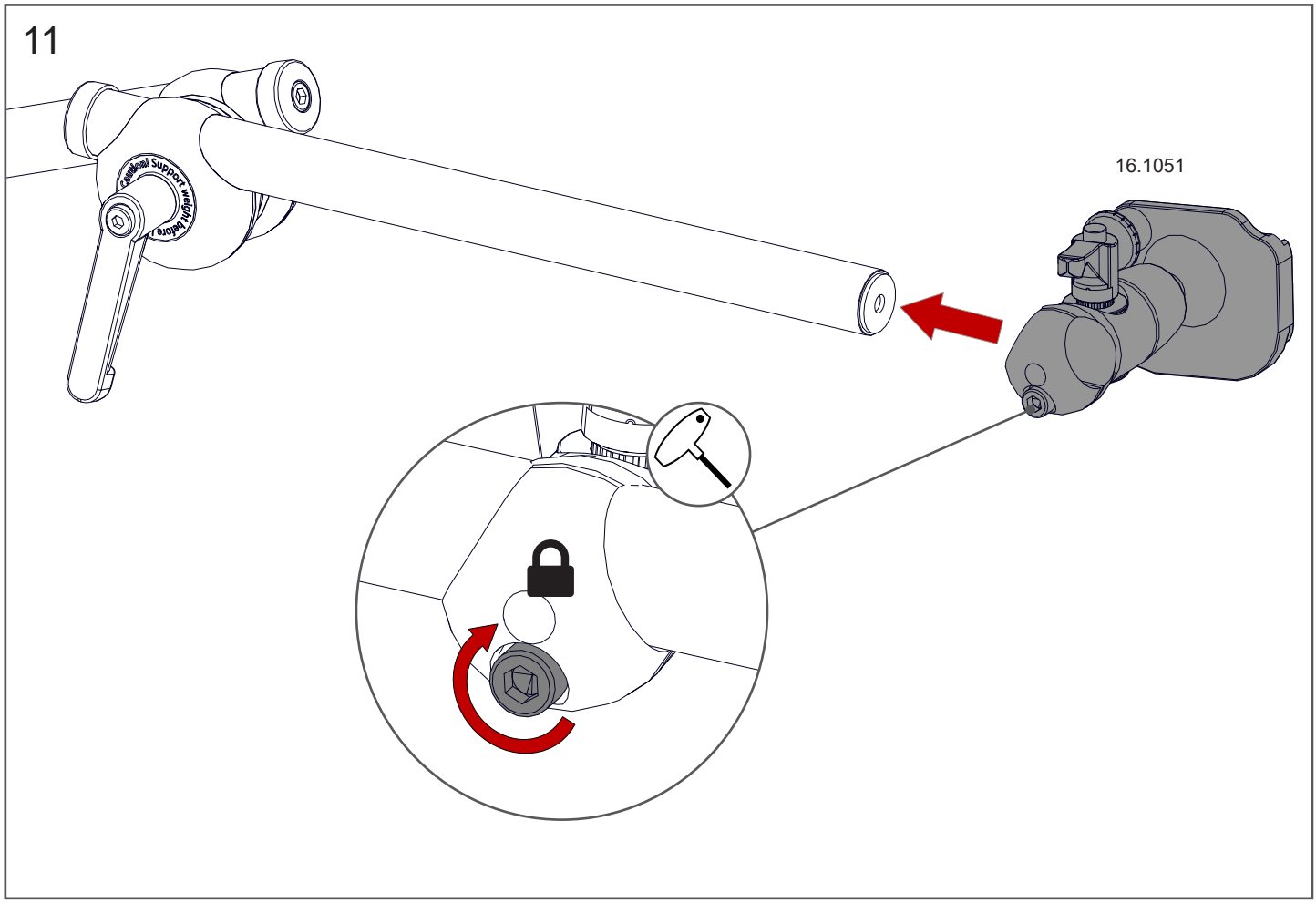
11
16.1051

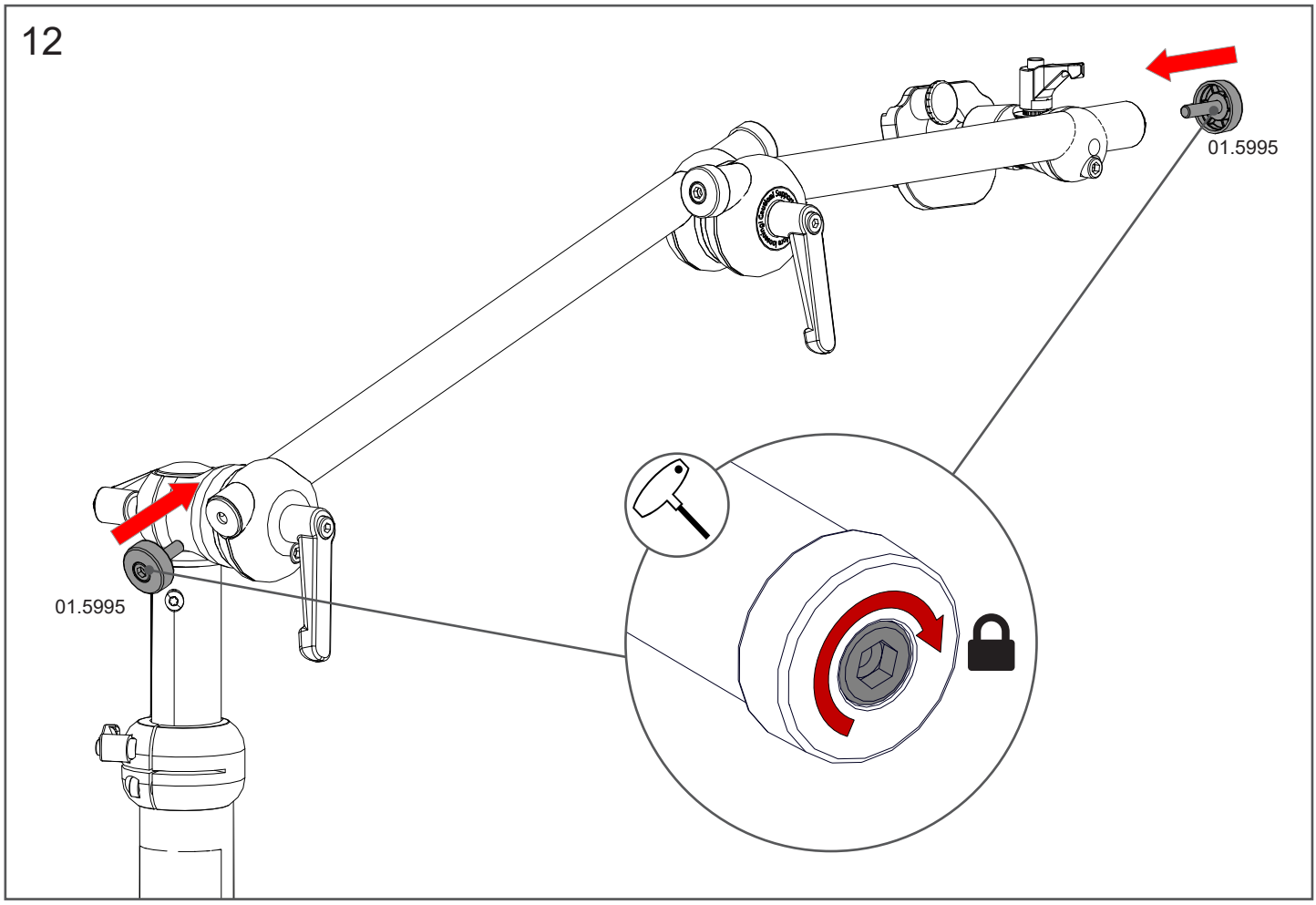
12
01.5995
01.5995

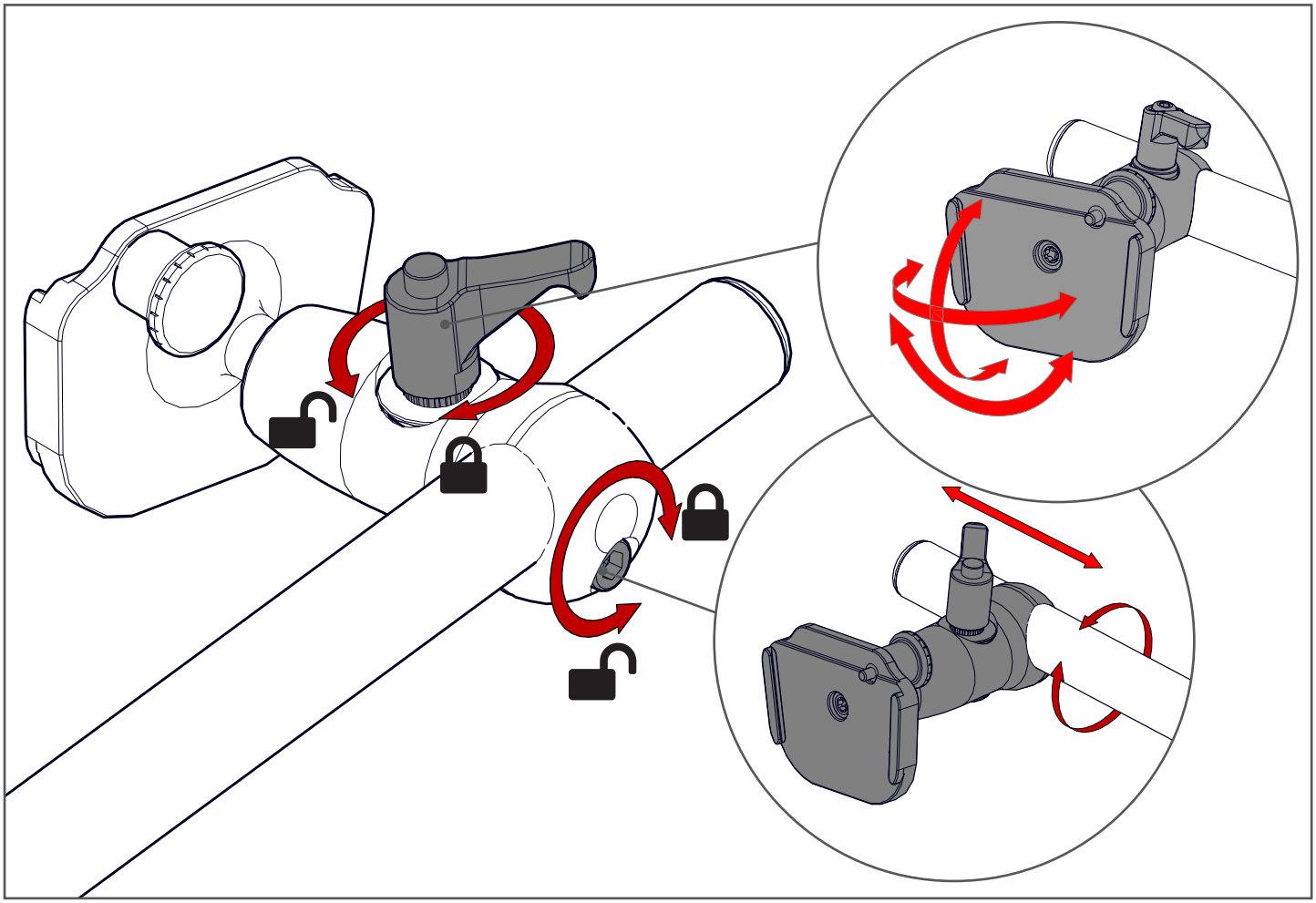

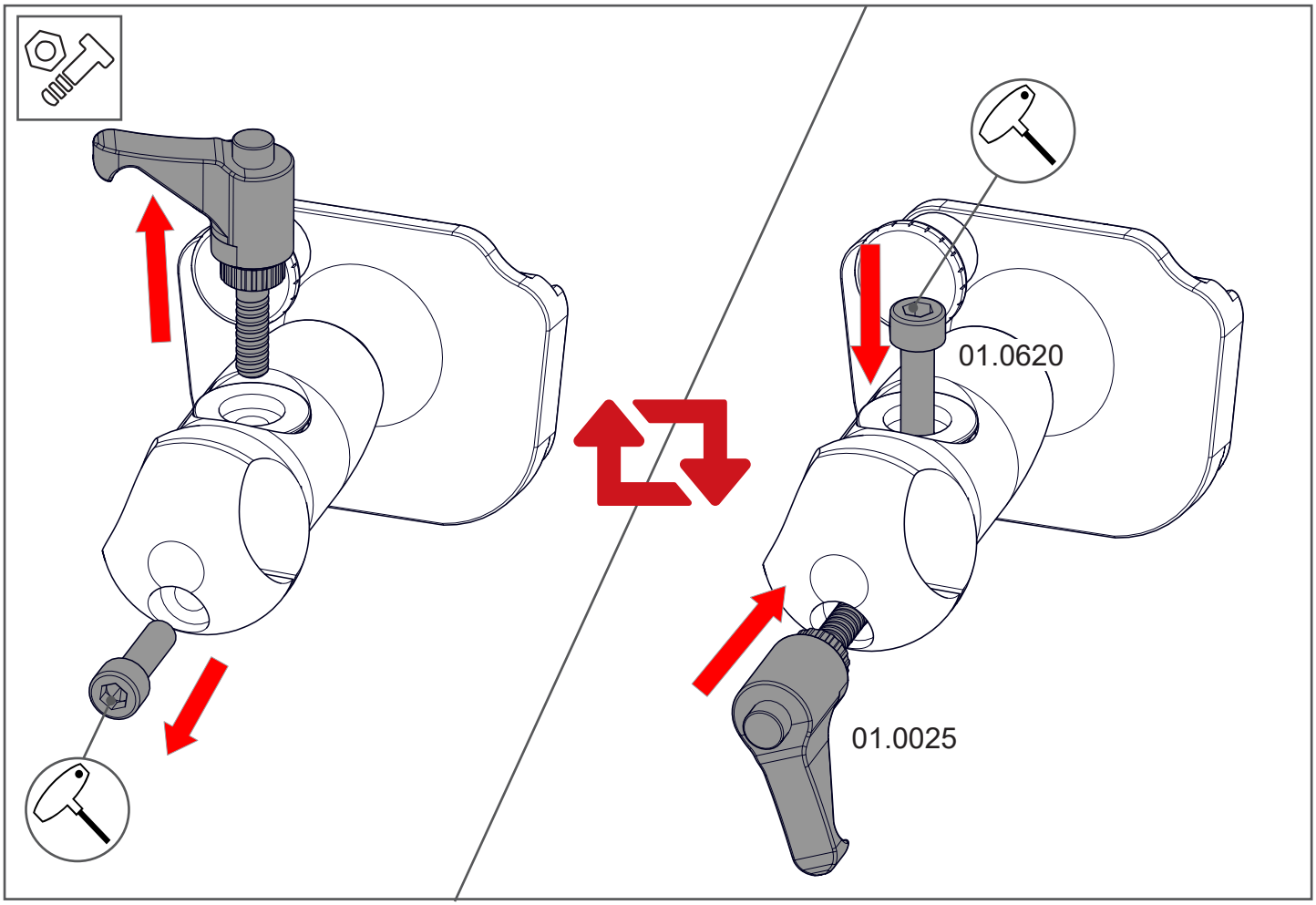
01.0620
01.0025

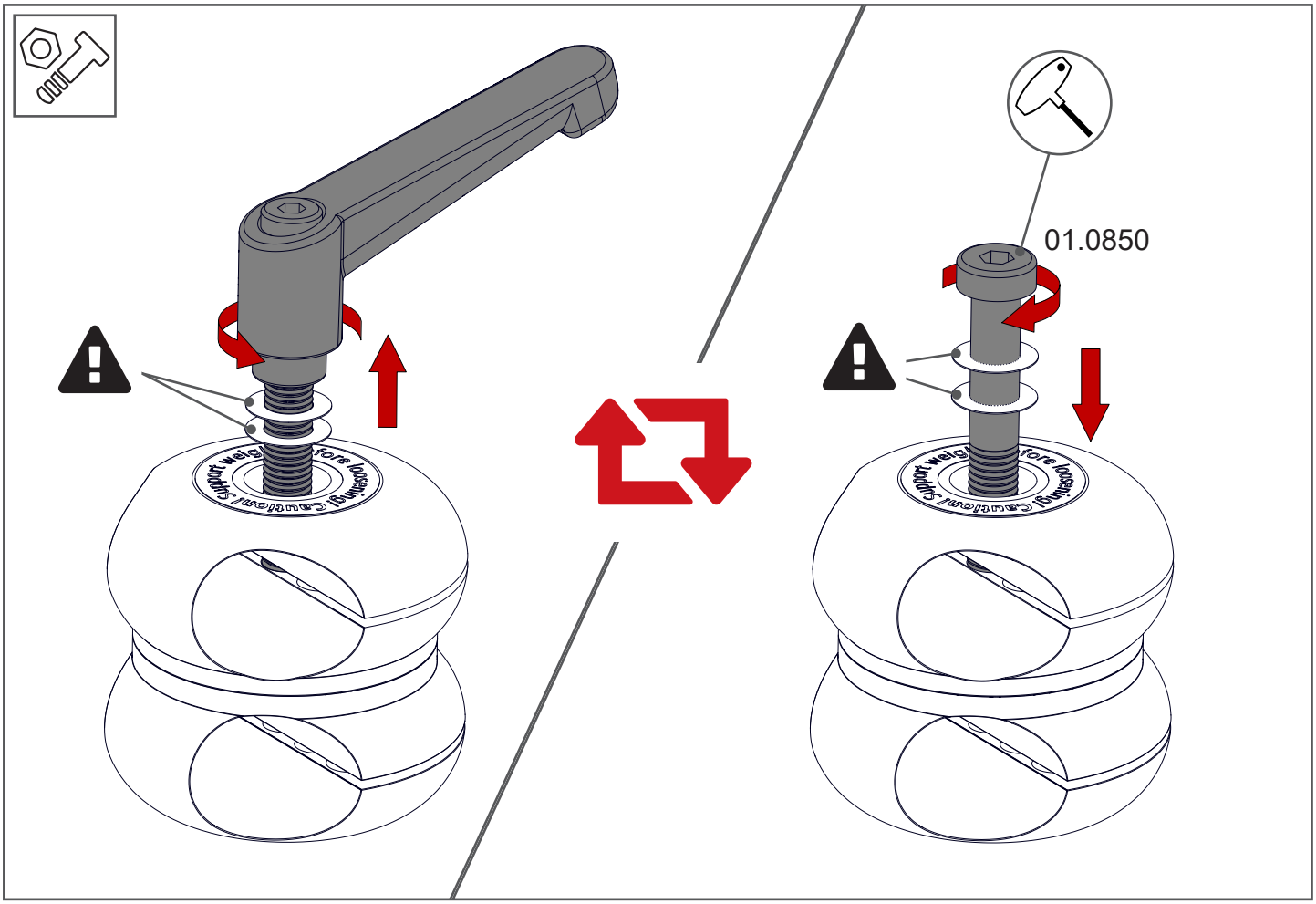
01.0850

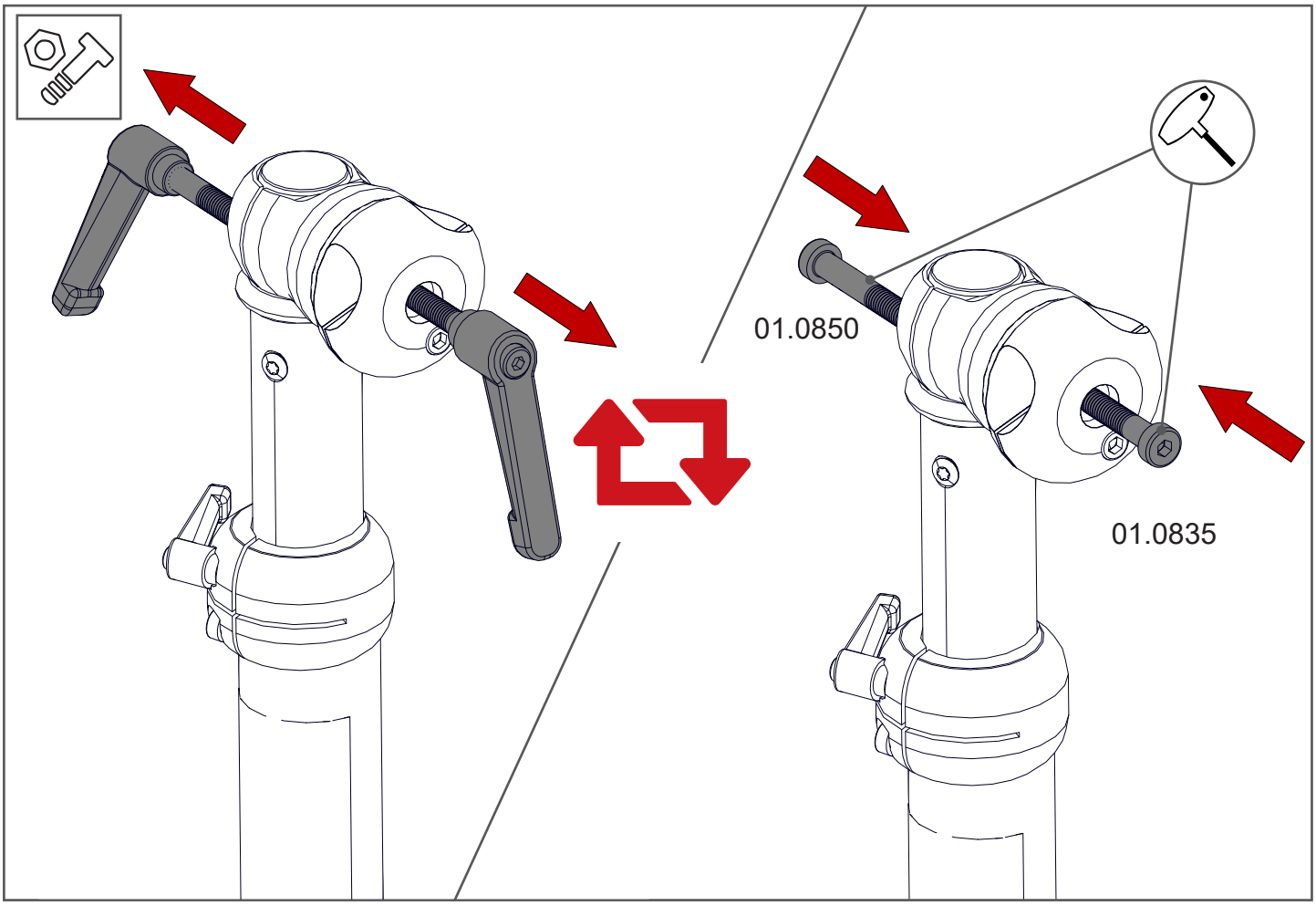
01.0850
01.0835

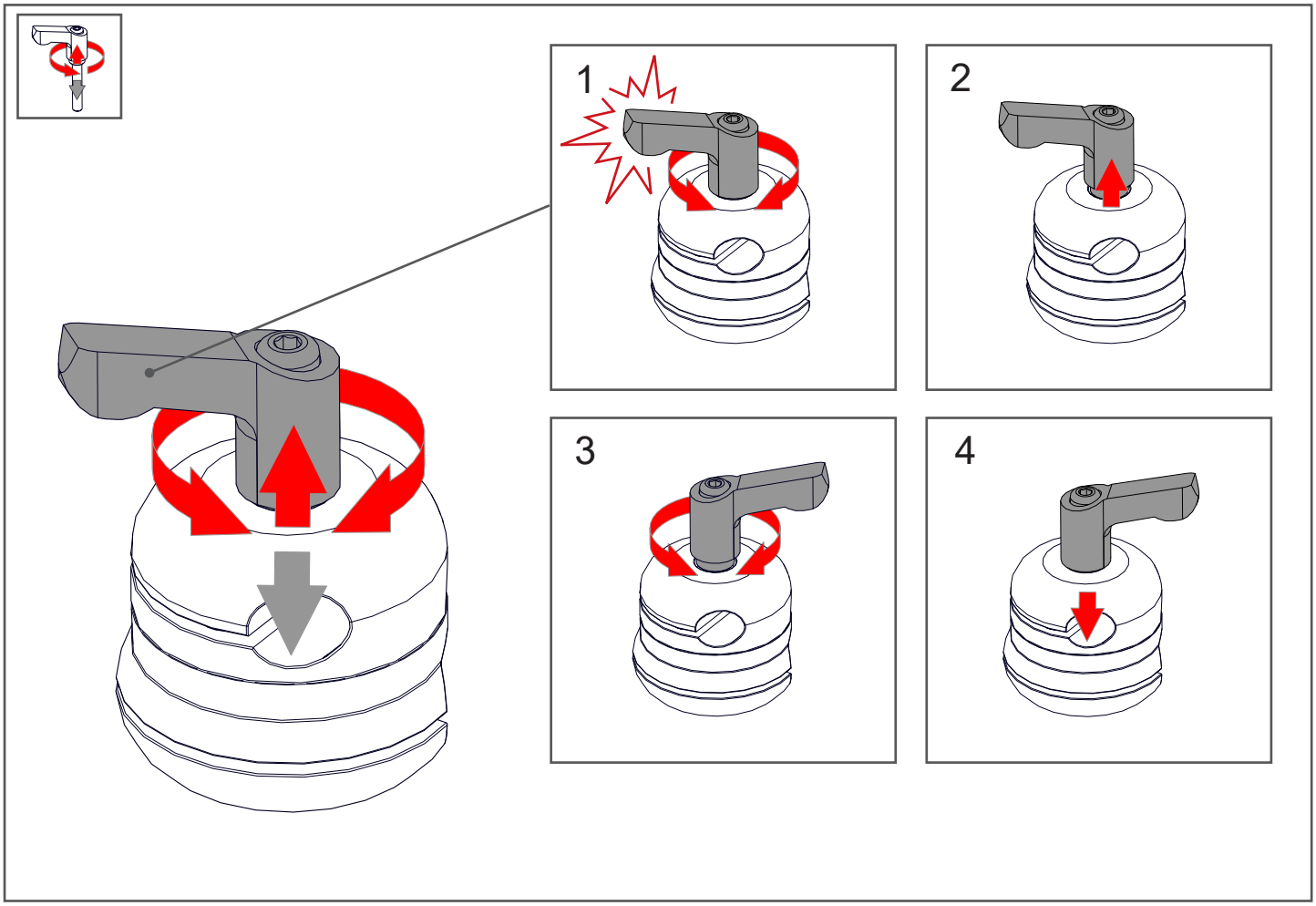
1
2
3
4

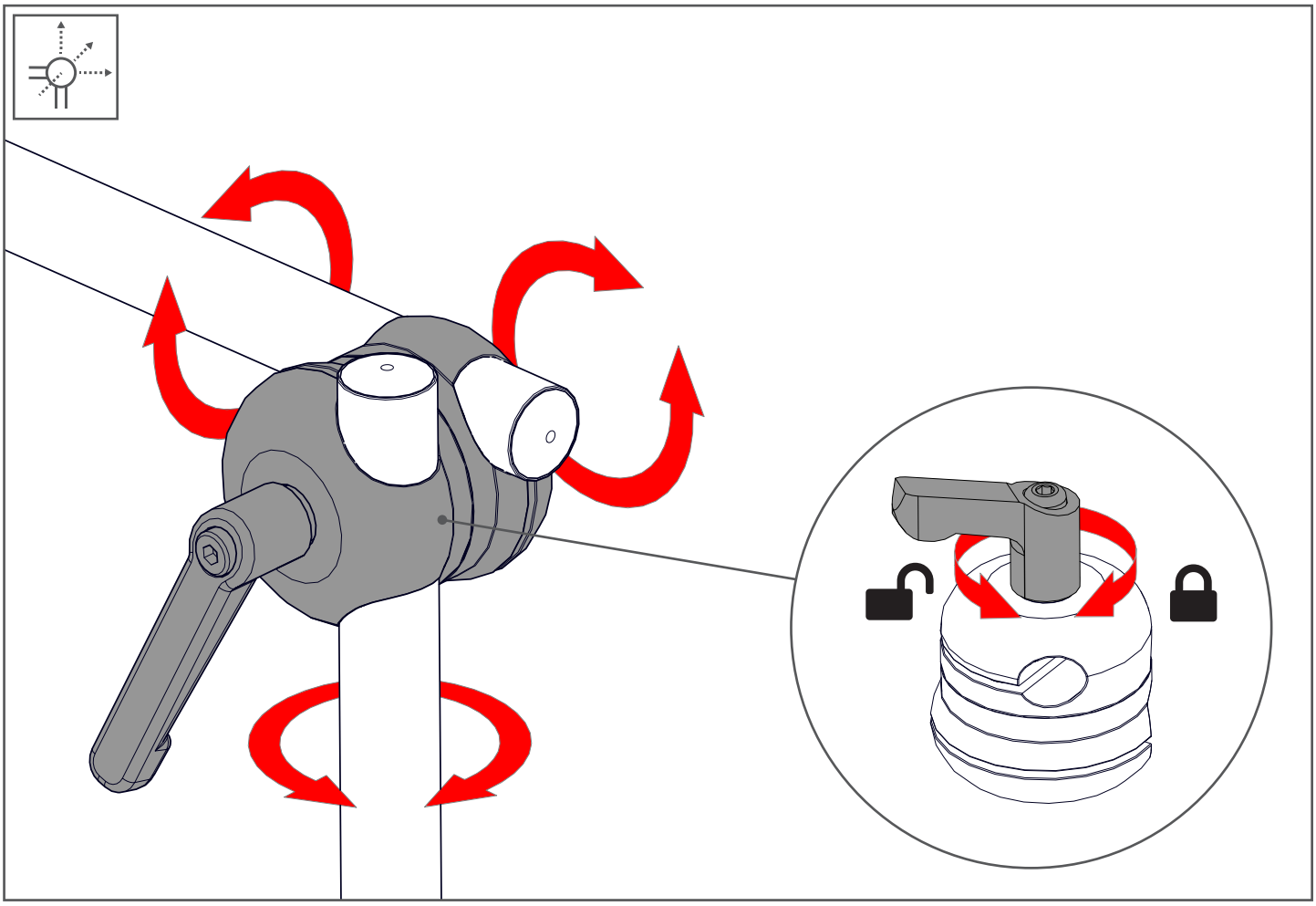

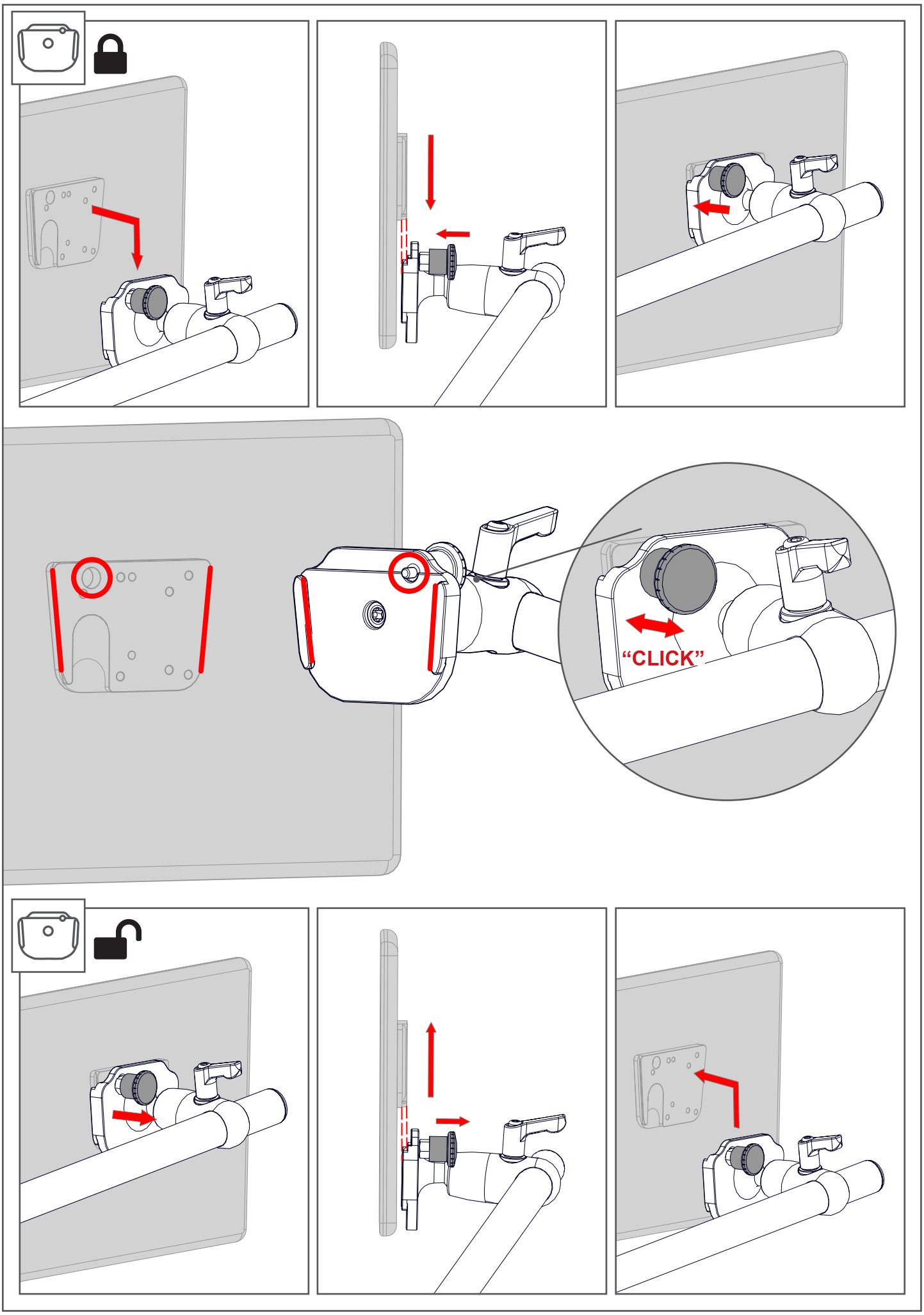
"CLICK"

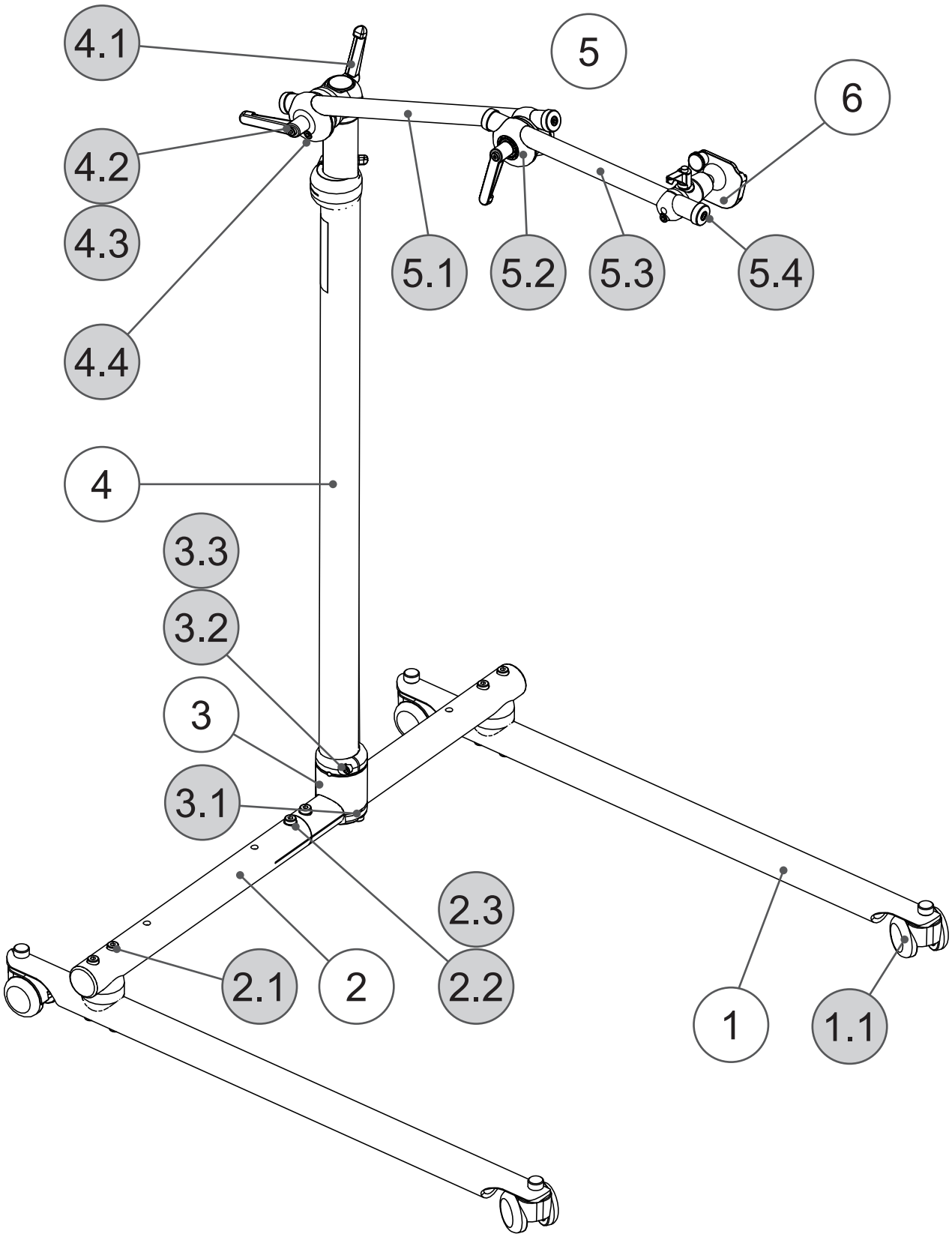
4.1
5
6
4.2
4.3
5.1
5.2
5.3
5.4
4.4
4
3.3
3.2
3
3.1
2.3
2.1
2
2.2
1
1.1

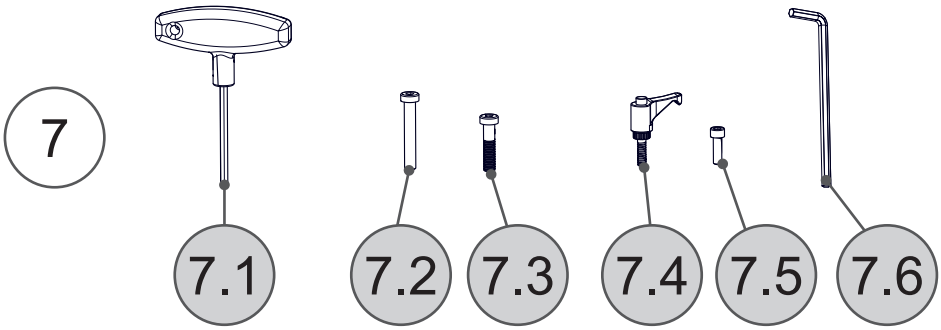
7
7.1
7.2
7.3
7.4
7.5
7.6

Pos.	No.	Bezeichnung	Description
1	17.9500	FS Bein	FS Leg
1.1	17.9540	FS Classic Doppelrolle	FS Classic Swivel Caster
2	17.9563	FS Traverse Vario	FS Traverse Vario
2.1	01.0850	Zylinderschraube M8x50	Cylinder head bolt M8x50
2.2	01.0369	Zylinderschraube M8x40	Cylinder head bolt M8x40
2.3	01.0394	Scheibe Ø8,4 mm	Washer Ø8.4 mm
3	17.9564	FS Knoten Lock	FS Node Lock
3.1	01.0835	Zylinderschraube M8x35	Cylinder head bolt M8x35
3.2	01.0620	Zylinderschraube M6x20	Cylinder head bolt M6x20
3.3	01.0393	Scheibe Ø6,4 mm	Washer Ø6.4 mm
4	17.9561QP	FS Säule VarioLock QP	FS Column VarioLock QP
4.1	01.0020	Klemmhebel M8x50	Clamping lever M8x50
4.2	01.0026	Klemmhebel M8x35	Clamping lever M8x35
4.3	01.0310	Passscheibe	Adjusting washer
4.4	01.0620	Zylinderschraube M6x20	Cylinder head bolt M6x20
5	17.9510	FS Arm	FS Arm
5.1	01.5520	Rohr Ø22x400 SOS	Tube Ø22x400 SOS
5.2	11.1350	M3D Uni QuickShift	M3D Uni QuickShift
5.3	01.5510	Rohr Ø22x300 SOS	Tube Ø22x300 SOS
5.4	01.5995	Abrutschsicherung	Slip-out safeguard
6	16.1051	UGA 22-DC	UDS 22-DC
7		Montagekit	Mounting kit
7.1	01.0027	T-Griff	T-Handle
7.2	01.0850	Zylinderschraube M8x50	Cylinder head bolt M8x50
7.3	01.0835	Zylinderschraube M8x35	Cylinder head bolt M8x35
7.4	01.0025	Klemmhebel M6x20	Clamping lever M6x20
7.5	01.0620	Zylinderschraube M6x20	Cylinder head bolt M6x20
7.6	01.0008	Innensechskantschlüssel 5mm	Allen wrench 5mm

vms
virtual mounting service
www.rehadapt.com/vms/

Rehadapt Engineering
GmbH & Co. KG

Heinrich-Hertz-Str. 104
34123 Kassel, Germany

Tel.: +49 561 220 717 0
Fax: +49 561 220 717 99

officeteam@rehadapt.com
https://rehadapt.com

Rehadapt
North America

40 Oser Ave, Suite 40-01
Hauppauge, NY 11788, USA

Tel.: 1 (888) 635-6962
Fax: 1 (888) 635-6962

officeteam.na@rehadapt.com
https://rehadapt.com